TRAIL FORTRESS

BUILT FOR THE TRAIL. CHECKED FOR YOUR TRUCK.

# K&N 30-1563 Installation Instructions

Cold Air Intake for Dodge Durango & Jeep Grand Cherokee

Part number: 30-1563

trailfortress.com/k-n-performance-air-intake-system-30-1563

Scan for fitment, price and install help

DRY FLOW®
AIR INTAKE SYSTEMS

NOT LEGAL FOR SALE OR USE ON ANY POLLUTION CONTROLLED MOTOR VEHICLE IN CALIFORNIA OR STATES ADOPTING CALIFORNIA EMISSION PROCEDURES.
See knfilters.com for CARB status on each part for a specific vehicle

# INSTALLATION INSTRUCTIONS

# 30-1563
# JEEP / DODGE
## 2011-21 Grand Cherokee
## 2011-21 Durango
## V8-5.7L

**NOTE: This kit was not designed to fit vehicles with a body lift.**

**TOOLS NEEDED:**
Ratchet
Extension
10mm Socket
4mm Allen Wrench

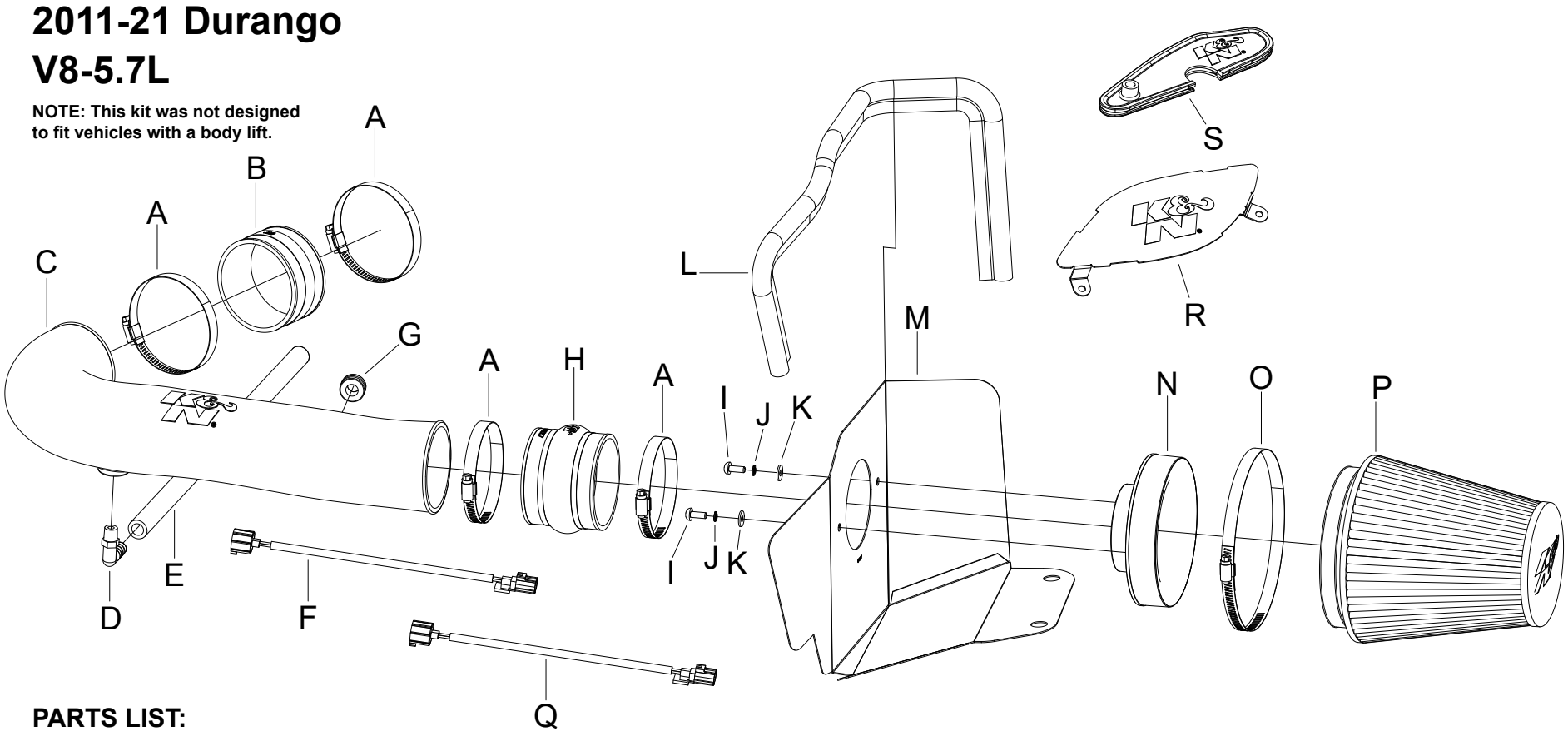


**PARTS LIST:**

| | Description | Qty. | Part # | | Description | Qty. | Part # | | Description | Qty. | Part # |
|---|---|---|---|---|---|---|---|---|---|---|---|
| A | HOSE CLAMP; #56 | 4 | 08620 | G | GROMMET; 1”OD, 1/2”ID, 1/2”THK | 1 | 08064 | M | HEAT SHIELD | 1 | 074087A |
| B | HOSE; 3.5”ID X 2”L | 1 | 08630 | H | HOSE; HUMP 3.5”ID X 3”L | 1 | 084057 | N | ADAPTER; UNVI. 6” FILTER | 1 | 21512-1 |
| C | INTAKE TUBE; (IH) | 1 | 087249A | I | BOLT; M6 X 1 X 16MM, BTNHD | 2 | 07730 | O | HOSE CLAMP; #104, BLK | 1 | 08697KA |
| D | VENT; 90DEG, 1/2”HOSE, 1/4”NPT, BLK | 1 | 08110FK | J | WASHER; 6MM FLAT | 2 | 08269 | P | AIR FILTER | 1 | RU-3101HBK |
| E | HOSE; 1/2”ID X 19”L | 1 | 084075 | K | WASHER; M6, SPLIT LOCK | 2 | 1-3025 | Q | EXTENSION HARNESS | 1 | 21681 |
| F | EXTENSION HARNESS | 1 | 21680 | L | EGDE TRIM; (30”L) | 1 | 102489 | R | BLOCK OFF | 1 | 073262 |
| | | | | | | | | S | BLOCK OFF; HOOD VENT, EPDM | 1 | 21597 |

**If you need any assistance please call 1-800-858-3333 to speak with a representative in our Customer Service Center before returning the product.**

**NOTE: FAILURE TO FOLLOW INSTALLATION INSTRUCTIONS AND NOT USING THE PROVIDED HARDWARE MAY DAMAGE THE INTAKE TUBE, THROTTLE BODY AND ENGINE.**

### TO START:

1. Turn off the ignition and disconnect the negative battery cable.
**NOTE: Disconnecting the negative battery cable erases pre-programmed electronic memories. Write down all memory settings before disconnecting the negative battery cable. Some radios will require an anti-theft code to be entered after the battery is reconnected. The anti-theft code is typically supplied with your owner’s manual. In the event your vehicles anti-theft code cannot be recovered, contact an authorized dealership to obtain your vehicles anti-theft code.**



2. Lift up the engine cover to dislodge it from the mounting grommets and remove it from the vehicle.



3. Remove the intake plenum mounting bolt shown and loosen the intake tube hose clamp.



4. Disconnect the inlet air temperature air sensor electrical connection.



5. Disconnect the crankcase vent hose from the port on the valve cover.



6. Release the two upper airbox retaining clips.



7. Remove the upper airbox and intake tube assembly.



8. Unhook the sealing trim from the fresh air intake scoop.



9. Lift up the lower airbox to dislodge it from the mounting grommets and then remove the lower airbox from the vehicle.

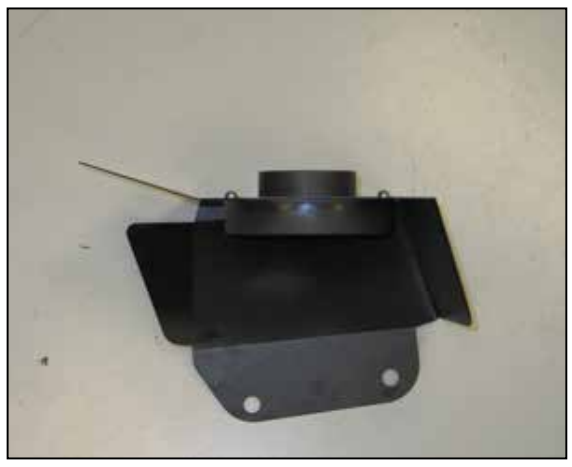

10. Install the filter adapter into the heat shield and secure with the provided hardware.

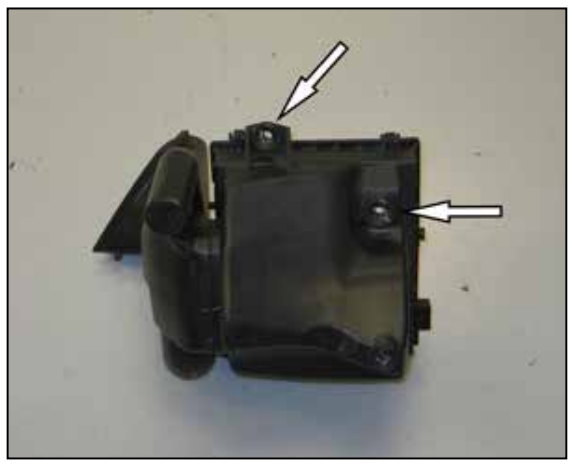

11. Remove two of the factory airbox mounting grommets from the lower airbox.

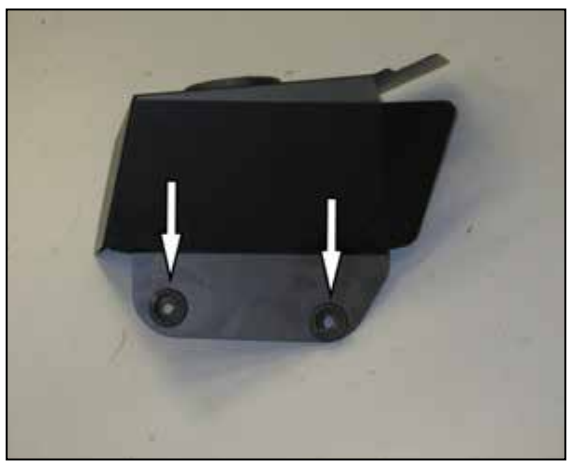

12. Install the two mounting grommets removed in the previous step into the heat shield as shown.



13. Install the provided edge trim onto the heat shield as shown. **NOTE: Some trimming of the edge trim will be necessary.**



14. Install the provided silicone hump hose (084057) onto the filter adapter and secure with the provided hose clamp.



15. Set the heat shield into the vehicle so that the mounting grommets slide over the factory airbox mounting studs.



16. Install the K&N filter onto the adapter and secure with the provided hose clamp.

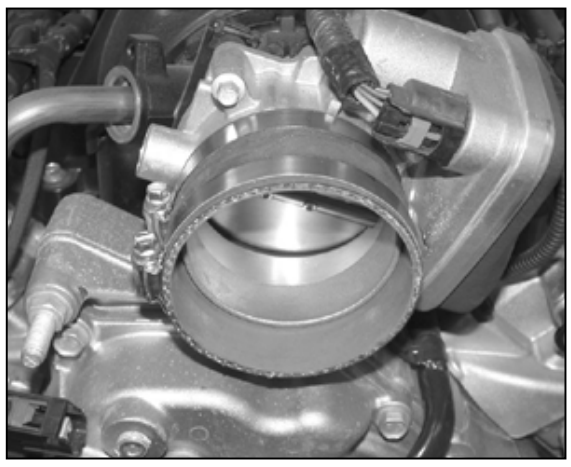

17. Install the provided silicone hose (08630) onto the throttle body and secure with the provided hose clamp.



18. Release the locking tab and the remove the inlet air temperature sensor from the factory intake tube by twisting counter clockwise. **NOTE: The inlet air temperature sensor is very fragile; take care to avoid damage while handling the sensor.**



19. Install the provided grommet into the K&N intake tube as shown.



20. Install the inlet air temperature sensor into the K&N intake tube. **NOTE: Be sure to remove the O-ring from the inlet air temperature sensor before installing.**



21. Install the 90* npt fitting into the K&N intake tube as shown.



22. Install the K&N intake tube into the silicone hump hose and then into the silicone hose at the throttle body, secure the intake tube with the provided hose clamp.



23. Install the crankcase vent hose onto the 90* vent fitting and then attach the open end to the valve cover port. Connect the inlet air temperature sensor extension harness into the factory electrical connection and then connect the other end into the inlet air temperature sensor as shown.



24. Reinstall the engine cover.



25. On models with heat extractor vents installed in the hood it is recommended to install the provided extractor block off plate. On Dodge vehicles, remove the two bolts holding in the grill.



26. Install the block off and secure with the factory hardware. Jeep models will use the EPDM block off.



27. Reconnect the vehicle's negative battery cable. Double check to make sure everything is tight and properly positioned before starting the vehicle.

28. It will be necessary for all K&N® high flow intake systems to be checked periodically for realignment, clearance and tightening of all connections. Failure to follow the above instructions or proper maintenance may void warranty.

## ROAD TESTING:

1. Start the engine with the transmission in neutral or park, and the parking brake engaged. Listen for air leaks or odd noises. For air leaks secure hoses and connections. For odd noises, find cause and repair before proceeding. This kit will function identically to the factory system except for being louder and much more responsive.

2. Test drive the vehicle. Listen for odd noises or rattles and fix as necessary.

3. If road test is fine, you can now enjoy the added power and performance from your kit.

4. K&N Engineering, Inc., requires cleaning the intake system's air filter element every 50,000 miles. When used in dusty or off-road environments, our filters will require cleaning more often. We recommend that you visually inspect your filter once every 25,000 miles to determine if the screen is still visible. When the screen is no longer visible some place on the filter element, it is time to clean it. To clean, purchase our Synthetic Filter Cleaner, part number 99-0624 and follow the easy instructions.

**NOT LEGAL FOR SALE OR USE ON ANY POLLUTION CONTROLLED MOTOR VEHICLE IN CALIFORNIA OR STATES ADOPTING CALIFORNIA EMISSION PROCEDURES.**

**See knfilters.com for CARB status on each part for a specific vehicle**



trailfortress.com/k-n-performance-air-intake-system-30-1563