TRAIL FORTRESS

BUILT FOR THE TRAIL. CHECKED FOR YOUR TRUCK.

ICON Vehicle Dynamics K93144 Installation Instructions

Stage 4 Billet UCA CDCV Suspension System for Ford F-150 (2021-2024)

Part number: K93144

trailfortress.com/stage-4-billet-uca-cdcv-suspension-system-ford-f150-icon-vehicle-dynamics-k93144

Scan for fitment, price and install help

ICON VEHICLE DYNAMICS®
7929 Lincoln Ave. Riverside, CA 92504
Phone: 951.689.ICON | Fax: 951.689.1016

98523DJ INSTALLATION INSTRUCTIONS

9-28-2023 REV.A

PART #	DESCRIPTION
98523DJ	21-23 F150 BILLET UCA DJ PRO KIT

COMPONENTS INCLUDED

(1) 197521 21 F150 BILLET UCA DRVR DJ PRO	(1) 197522 21 F150 BILLET UCA PASS DJ PRO

HARDWARE INCLUDED

(4) 157520 L-R ADJ SLEEVE 1.00-14L / .75-16 (2) 177158DJ 21-23 F150 DELTA JOINT PRO (4) 197502 HEIM SPACER RSMX12 X 14MM X 2.125 CZINC (4) 197503 HEIM SPACER RSMX12 X 14MM X 2.775 CZINC (4) 295511 ROD END JM12T F1 FIT	(2) 295570 RETAINING RING WHT-237 SS (2) 295571 -035 O-RING (2) 297165 DELTA PRO BILLET UCA DUST COVER (8) 605002 6-32 X .500 SHCS 18-8 (8) 605145 3/8-16 X 1.000 12PT (1) 605968 BLUE THREAD LOCKER 2ML BULLET

TOOLS REQUIRED

JACK JACK STANDS TORQUE WRENCH 10MM SOCKET / WRENCH 18MM SOCKET / WRENCH	21MM SOCKET / WRENCH 27MM SOCKET / WRENCH 9/16" SOCKET / WRENCH 5/8" SOCKET / WRENCH T45 TORX

TECH NOTES

1. ALL ICON UPPER CONTROL ARMS HAVE BEEN ENGINEERED TO ALLOW FOR THE MOST POSSIBLE CASTER, WHILE STILL ALLOWING THE VEHICLE TO BE PROPERLY ALIGNED. NOTIFY YOUR PROFESSIONAL ALIGNMENT SHOP OF THIS INFORMATION SO THAT MAXIMUM RIDE QUALITY CAN BE ACHIEVED.

2. ICON DELTA JOINTS ARE PRE-GREASED FROM THE FACTORY. ICON RECOMMENDS GREASING THE DELTA JOINT EVERY 3,000 MILES (OR EVERY OIL CHANGE). ADD NEW GREASE UNTIL ALL OF THE OLD GREASE IS EXPELLED FROM THE BOTTOM OF THE DELTA JOINT ASSEMBLY, WIPE AWAY EXCESS WITH A RAG OR SHOP TOWEL.

3. DO NOT EXCEED 1.875" ADJUSTMENT FROM THE CENTER OF THE ROD END TO THE EDGE OF THE BILLET UPPER CONTROL ARM. FAILURE CAUSED BY EXCESSIVE ADJUSTMENT WILL NOT BE COVERED UNDER ICON'S WARRANTY POLICY. REFER TO TECH NOTE #3 PHOTO ON PAGE 5.

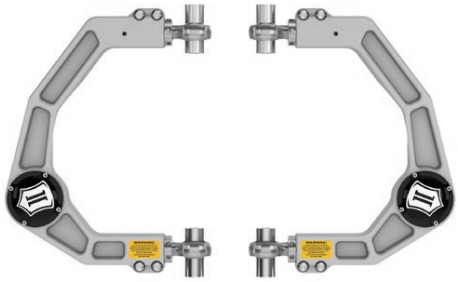

WARNING!

*** READ ALL INSTRUCTIONS THOROUGHLY FROM START TO FINISH BEFORE BEGINNING INSTALLATION! IF THESE INSTRUCTIONS ARE NOT PROPERLY FOLLOWED SEVERE FRAME, SUSPENSION AND TIRE DAMAGE MAY RESULT TO THE VEHICLE!*

*** ICON VEHICLE DYNAMICS RECOMMENDS THAT YOU EXERCISE EXTREME CAUTION WHEN WORKING UNDER A VEHICLE THAT IS SUPPORTED WITH JACK STANDS.*

*** ICON VEHICLE DYNAMICS RECOMMENDS ALL INSTALLATION TO BE PERFORMED BY A PROFESSIONAL SHOP/SERVICE TECHNICIAN. PRODUCT FAILURE CAUSED BY IMPROPER INSTALLATION WILL NOT BE COVERED UNDER ICON'S WARRANTY POLICY.*

INSTALLATION

1. Using a properly rated jack, raise the front of the vehicle and support the frame rails with jack stands. Ensure the jack stands are secure and set properly before lowering the jack. NEVER WORK UNDER AN UNSUPPORTED VEHICLE. Remove the front wheels.

2. Remove the coilover/strut assembly to gain access to the upper control arm bolts.

3. Remove the 2 nuts from the lower shock mount using an 18mm socket/wrench (5/8" on ICON coilover).

4. Support the spindle with a jack or strap and remove the lower control arm bolts from the frame using a 27 and 21mm socket/wrench. This will allow you to separate the lower arm and lower shock studs. **[FIGURE 1]**

FIG.1



4b. If you prefer to leave the lower arm in place, use a hammer to press the studs out of the lower bar pin assembly.

4c. If ICON coilover is already installed, you do not need to remove the lower control arm from the frame.

5. Disconnect the tie rod from the knuckle using a 21mm and 10mm wrench.

trailfortress.com/stage-4-billet-uca-cdcv-suspension-system-ford-f150-icon-vehicle-dynamics-k93144

6. Remove the 3 nuts from the top of the factory shock assembly with an 18mm socket/wrench (9/16" for ICON coilover). The coilover can then be removed completely. **[FIGURE 2]**

FIG.2



7. If the lower arm was removed, Reinstall it now, only snugging the bolts in place (They will be torqued at the end).

8. If truck is equipped with Dynamic Bending Headlamps (Automatic ride height adjusting headlights) you will need to remove the bracket. Use a flat blade screwdriver or pry bar to carefully pop the socket off the ball. **[FIGURE 3]**

FIG.3



9. Remove the sway-bar link and upper control arm from the spindle. Support spindle with a jack or strap to prevent the CV (4x4) or brake lines from over extending (18mm, 21mm, T45 Torx). **[FIGURE 4]**

FIG.4

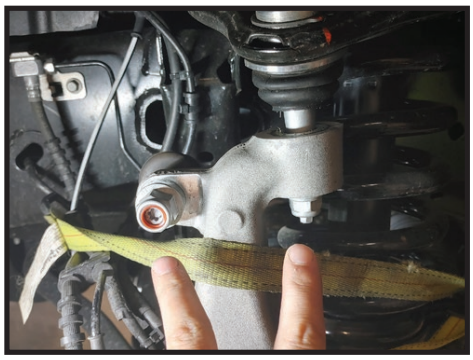

10. Remove the UCA from the frame using a 21mm and 18mm socket/wrench.

11. The spacers are installed as pictured, Narrow spacers go towards the coilover. Wide spacers go away from the coilover. **[FIGURE 5]**

FIG.5

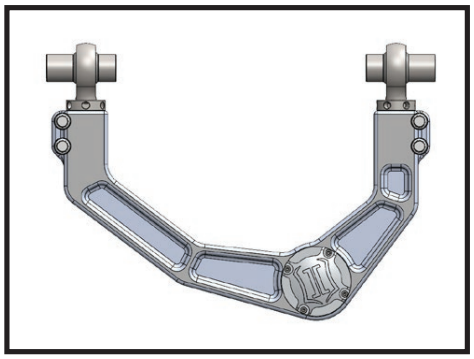

12. If truck is equipped with Dynamic Bending Headlamps (automatic height adjusting headlights) you will need to install the bracket (sold separately) on the driver side billet UCA or the factory ball stud on the tube UCA. The factory ball stud takes a 8mm and 11mm wrench. **[FIGURE 6]**

FIG.6

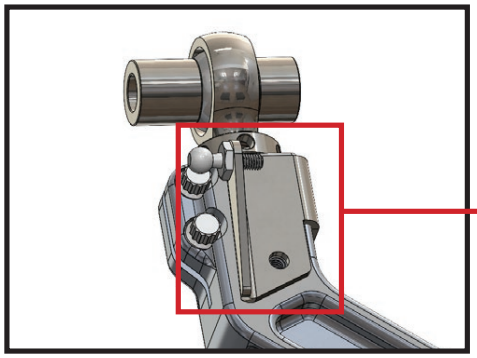

13. If equipped with the Continuous Control Damping (CCD) or Dynamic Bending Headlamps, the bracket on the frame will need to be removed and moved down 3/4". Remove 11mm bolt that holds the bracket onto the frame. **[FIGURE 7]**

FIG.7

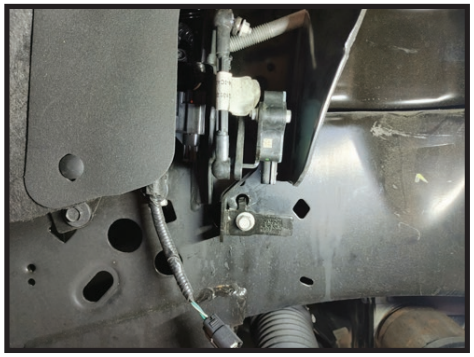

trailfortress.com/stage-4-billet-uca-cdcv-suspension-system-ford-f150-icon-vehicle-dynamics-k93144

14. Use a screwdriver to lift the clip nut and relocate it down 3/4". Mark the center of the hole and drill it out to 1/2". **[FIGURE 8, 9, 10]**

FIG.8

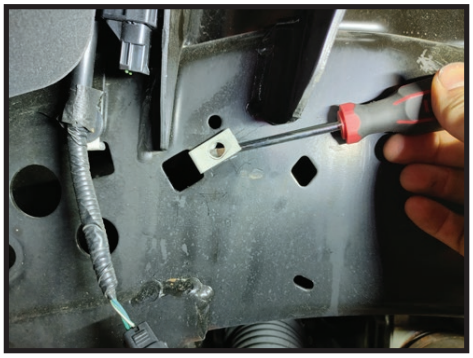

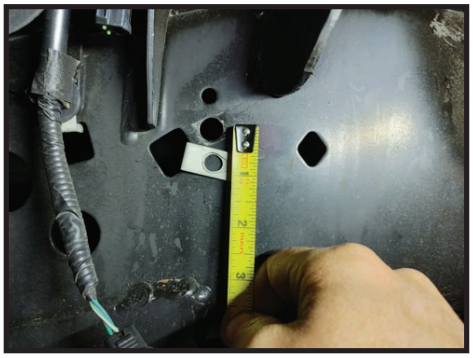

FIG.9

FIG.10

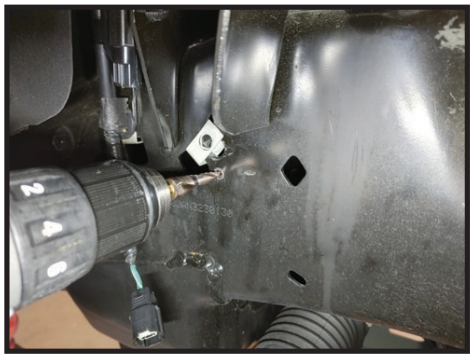

15. Place clip nut into the new hole. **[FIGURE 11]**

FIG.11

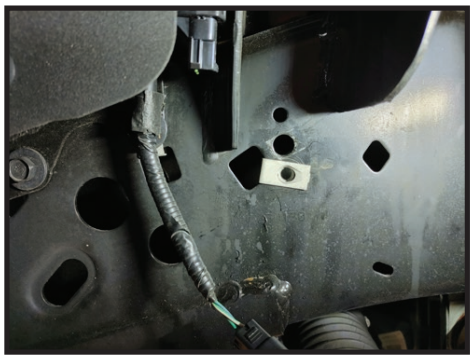

16. Install the bracket and sensor tab into the old bolt hole and use the factory hardware to secure it into the new location.

17. Place the ICON upper control arm into the mounts on the chassis and hand tighten using OEM hardware.

18. Reinstall OEM shock or refer to ICON coil over assembly instructions now.

19. Install tapered pin of UCA into the spindle and tighten using the supplied nut and 18mm socket/wrench. [Torque to 75 ft-lbs] **[FIGURE 12]**

FIG.12



20. Tighten the UCA bolts at the chassis using a 21mm and 18mm socket/wrench. [Torque to factory spec]

21. Install the Delta Joint dust cap and o-ring using the 4 socket head screws.

22. Repeat steps on opposite side.

23. Reinstall wheels and carefully lower vehicle to the ground. [Torque lug nuts to factory spec]

24. If the lower control arm was removed, now is the time to tighten the frame bolts. [Torque to factory spec]

25. Have the vehicle professionally aligned.



[TECH NOTE #3]

VERIFY ALL FASTENERS ARE PROPERLY TORQUED BEFORE DRIVING VEHICLE.

RETORQUE ALL NUTS, BOLTS AND LUGS AFTER 100 MILES AND PERIODICALLY THEREAFTER.

ICON VEHICLE DYNAMICS LIMITED LIFETIME WARRANTY

ICON Vehicle Dynamics warrants to the original retail purchaser who owns the vehicle on which the product was originally installed. ICON Vehicle Dynamics does not warrant the product for finish, alterations, modifications and/or installation contrary to ICON Vehicle Dynamics instructions. ICON Vehicle Dynamics products are not designed, nor are they intended to be installed on vehicles used in race applications, for racing purposes or for similar activities. (A "race" is defined as any contest between two or more vehicles, or a contest of one or more vehicles against the clock, whether or not such contest is for a prize). This warranty does not include coverage for police or taxi vehicles, race vehicles, or vehicles used for government or commercial purposes. Also excluded from this warranty are sales outside of the United States of America and Canada.

ICON Vehicle Dynamics' obligation under this warranty is limited to the repair or replacement, at ICON Vehicle Dynamics' discretion, of the defective product. Any and all costs of removal, installation or re-installation, freight charges and incidental or consequential damages are expressly excluded from this warranty. Items that are subject to wear are not considered defective when worn and are not covered.

ICON Vehicle Dynamics components must be installed as a complete kit as shown in our current application guide. Any substitutions or exemptions of required components will immediately void the warranty. Some finish damage may happen to parts during shipping and is not covered under warranty.

This warranty is expressly in lieu of all other warranties expressed or implied. This warranty shall not apply to any product that has been improperly installed, modified or customized subject to accident, negligence, abuse or misuse.

ICON VEHICLE DYNAMICS®
PERFORMANCE SUSPENSION SYSTEMS AND SHOCK ABSORBERS

7929 Lincoln Ave. Riverside, CA 92504 Phone: 951.689.ICON Fax: 951.689.1016
www.iconvehicledynamics.com

FOLLOW US ON FACEBOOK!