ICON Vehicle Dynamics K93141T Installation Instructions

Stage 1 Tubular UCA Suspension System for Ford F-150 (2021-2024)

Part number: K93141T

trailfortress.com/stage-1-tubular-uca-suspension-system-ford-f150-icon-vehicle-dynamics-k93141t

Scan for fitment, price and install help

ICON VEHICLE DYNAMICS®
7929 Lincoln Ave. Riverside, CA 92504
Phone: 951.689.ICON | Fax: 951.689.1016

91723 INSTALLATION INSTRUCTIONS

8-9-2023 REV.A

PART #	DESCRIPTION
91723	21-23 F150 TREMOR 2-3" 2.5 VS IR COILOVER KIT

COMPONENTS INCLUDED

(1) 194800D 21 F150 TREMOR 2-3" 2.5 CO IR UPKG DRIVER	(1) 194802P 21-UP F150 TREMOR 2-3" 2.5 CO IR UPKG PASS

HARDWARE INCLUDED

611019 HARDWARE KIT	
(6) 605101 3/8"-16 X 1.00" HHCS	(6) 605131 3/8" SPLIT LOCK WASHER
611052 HARDWARE KIT	
(4) 605205 7/16"-14 X 2.75" HHCS (4) 605230 7/16" SAE FLAT WASHER	(4) 605231 WASHER-1.00" X 0.469" X 0.125"

TOOLS REQUIRED

JACK JACK STANDS TORQUE WRENCH 8MM SOCKET / WRENCH 10MM SOCKET / WRENCH 18MM SOCKET / WRENCH	21MM SOCKET / WRENCH 27MM SOCKET / WRENCH 5/16" SOCKET / WRENCH 9/16" SOCKET / WRENCH 5/8" SOCKET / WRENCH

TECH NOTES

1. ESTIMATED INSTALL TIME: 2-3 HOURS.

2. YOUR ICON COILOVER ASSEMBLIES COME FACTORY CHARGED TO 250 PSI. RELEASING NITROGEN PRESSURE MAY LEAD TO SHOCK MALFUNCTION AND REDUCED RIDE QUALITY. FAILURE CAUSED BY LOW NITROGEN PRESSURE IS NOT COVERED UNDER ICON'S WARRANTY POLICY.

3. MUST BE USED WITH ICON UCA 98522DJ OR 98523DJ.

4. FOR TREMOR EQUIPPED TRUCKS ONLY.

5. THE SHOCKS SHIP AT ICON'S RECOMMENDED RIDE HEIGHT. ICON DOES NOT RECOMMEND ADJUSTING THE COIL BEYOND 1.75" OF THREADS BETWEEN THE BOTTOM OF THE TOP CAP AND THE TOP OF THE COIL NUT. ADJUSTING BEYOND 1.875" OF THREAD SHOWING WILL REDUCE RIDE QUALITY. DO NOT EXCEED 2.5" OF EXPOSED THREADS.



WARNING!

*** READ ALL INSTRUCTIONS THOROUGHLY FROM START TO FINISH BEFORE BEGINNING INSTALLATION! IF THESE INSTRUCTIONS ARE NOT PROPERLY FOLLOWED SEVERE FRAME, SUSPENSION AND TIRE DAMAGE MAY RESULT TO THE VEHICLE!*

*** ICON VEHICLE DYNAMICS RECOMMENDS THAT YOU EXERCISE EXTREME CAUTION WHEN WORKING UNDER A VEHICLE THAT IS SUPPORTED WITH JACK STANDS.*

*** ICON VEHICLE DYNAMICS RECOMMENDS ALL INSTALLATION TO BE PERFORMED BY A PROFESSIONAL SHOP/SERVICE TECHNICIAN. PRODUCT FAILURE CAUSED BY IMPROPER INSTALLATION WILL NOT BE COVERED UNDER ICON'S WARRANTY POLICY.*

INSTALLATION

1. Using a properly rated jack, raise the front of the vehicle and support the frame rails with jack stands. Ensure the jack stands are secure and set properly before lowering the jack. NEVER WORK UNDER AN UNSUPPORTED VEHICLE. Remove the front wheels/tires.

2. Disconnect the tie rod from the spindle using a 21mm and 10mm wrench.

3. Disconnect the sway bar link from spindle using a 21mm and T45 torx wrench. **[FIGURE 1]**

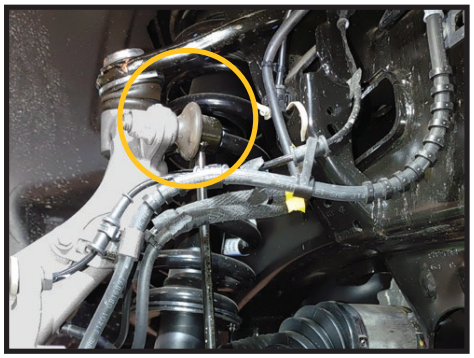

FIG.1

4. Remove the 2 nuts from the lower shock mount using an 18mm socket/wrench. **[FIGURE 2]**



FIG.2

trailfortress.com/stage-1-tubular-uca-suspension-system-ford-f150-icon-vehicle-dynamics-k93141t

5. Support the spindle with a jack or strap and remove the lower control arm bolts from the frame using a 27 and 21mm socket/wrench. This will allow you to separate the lower arm and lower shock studs. **[FIGURE 3]**

FIG.3



If you prefer to leave the lower arm in place, use a hammer to push the studs out of the lower bar pin assembly.

6. Remove the 3 nuts from the top of the factory shock assembly with an 18mm socket/wrench. The coilover can then be removed completely. **[FIGURE 4]**

FIG.4



7. If the Lower arm was removed, re-install it at this time. Do not torque the pivot bolts until the truck is sitting on its own weight.

8. Using a hammer or a ball joint separator, separate the taper from the spindle. Remove the nut and disconnect the UCA from the spindle. if applicable, refer to ICON Delta Joint Upper Control Arm installation instruction at this time.

9. Install ICON coil-over assembly now, using supplied 3/8" bolts (605101) and washers (605131) using a 9/16" socket/wrench [Torque to 30 ft-lbs]. The charge port points out, away from the frame. **[FIGURE 5]**

FIG.5

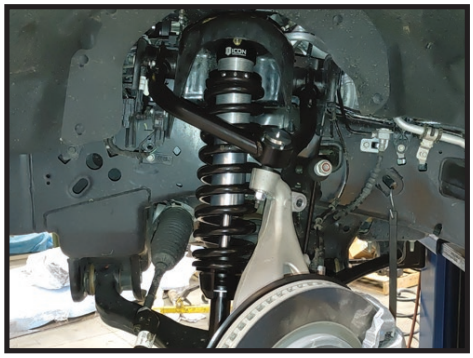

10. Use the supplied 7/16” bolts and washers to secure the ICON coil-over to the lower arm using a 5/8” wrench/socket. [Torque to 50 ft-lbs] The bar pin is installed to offset the shock forward to increase axle clearance. Each 7/16” bolt will get 2 washers, the thicker black oxide washer will go against the Lower control arm, while the thinner yellow zinc washer will go against the head of the bolt. **[FIGURE 6 & 7]**

FIG.6

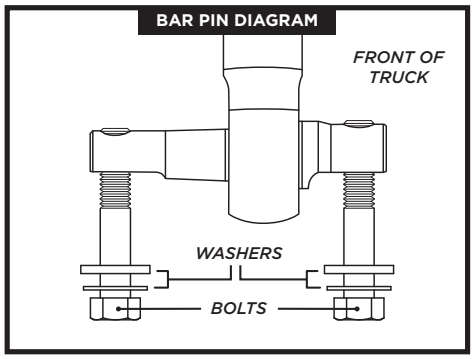



FIG.7

11. Connect the upper control arm to the spindle using an 18mm socket/wrench. [Torque OEM balljoint to factory spec] [75 ft-lbs for the ICON DELTA JOINT]

12. Connect the tie rod to the spindle using a 21mm and 10mm wrench. [Torque to factory spec]

13. Connect the swaybar link to the spindle using a 21mm and T45 torx wrench.

14. Repeat steps for passenger side.

15. Install Wheels and lower vehicle to the ground. [Torque to factory spec]

16. If the lower arms were removed from the frame pivots, tighten the bolts now. [Torque to factory spec]

17. Have the truck professionally aligned.

VERIFY ALL FASTENERS ARE PROPERLY TORQUED BEFORE DRIVING VEHICLE.

RETORQUE ALL NUTS, BOLTS AND LUGS AFTER 100 MILES AND PERIODICALLY THEREAFTER.

2.5 VS SERIES SHOCK & COILOVER TECHNICAL INFORMATION

MAINTENANCE

ICON shock absorbers are a high quality rebuildable race style shock absorber designed for optimal performance. With a unit of this caliber on your vehicle, routine maintenance is required to keep them looking and operating in like new condition. Residual oil and assembly lube may be present at all seal paths from the factory out of the box and is considered normal. Pooling of oil however is not acceptable at any time and one should contact the ICON dealer where purchased.

BELOW ARE GUIDELINES BASED ON HOW YOU USE YOUR VEHICLE BUT YOUR MILEAGE MAY VARY:

STREET USE:

- Send in for factory servicing every 40,000 miles or if a leak develops, ride quality decreases, or they begin to make excessive noise.
- Remove any buildup of road salt, mud, or debris from shocks and coil springs anytime accrued
- Clean with mild soap and water with each oil change or anytime you notice build up.
- Wax the cylinders yearly with automotive wax to prevent corrosion.
- Check nitrogen pressure yearly. (252004 charge needle assembly available at any ICON distributor)
- Check bearings for excessive wear yearly.
- **DO NOT** apply any type of lube to the upper and lower bearings.

STREET/DIRT:

- Send in for factory servicing every 15,000 miles or if a leak develops, ride quality decreases, or they begin to make excessive noise.
- Clean with mild soap and water with each oil change, offroad trip, or anytime you notice build up.
- Wax the cylinders yearly with automotive wax to prevent corrosion.
- Check nitrogen pressure each dirt outing. (252004 charge needle assembly available at any ICON distributor)
- Check bearings for excessive wear yearly.
- **DO NOT** apply any type of lube to the upper and lower bearings.

DIRT USE:

- Send in for factory servicing every 1,000 miles.
- Check nitrogen pressure each outing. (252004 charge needle assembly available at any ICON distributor)
- Remove any buildup of mud or debris from shocks and coil springs after every outing.

SELF-SERVICE:

- Contact ICON for service kits & tools at (951) 689-4266.

PRODUCT REGISTRATION

Please visit: http://www.iconvehicledynamics.com/tech-support/registration/ to register your product.

ICON VEHICLE DYNAMICS SHOCK ABSORBER WARRANTY

This shock absorber has a 1 year warranty against any manufacturer's defects. If a shock fails within the initial year of ownership, the shock must be shipped to ICON Vehicle Dynamics for inspection and service. If a shock is inspected and it has been determined the shock failed due to neglect, damage caused by improper installation or any other reason besides "normal wear and tear", the owner of said shock is responsible for all service costs. This includes labor, parts, and shipping.

ICON Vehicle Dynamics warrants to the original retail purchaser who owns the vehicle on which the product was originally installed. ICON Vehicle Dynamics does not warrant the product for finish, alterations, modifications and/or installation contrary to ICON Vehicle Dynamics instructions. ICON Vehicle Dynamics products are not designed, nor are they intended to be installed on vehicles used in race applications, for racing purposes or for similar activities. (A "race" is defined as any contest between two or more vehicles, or a contest of one or more vehicles against the clock, whether or not such contest is for a prize). This warranty does not include coverage for police or taxi vehicles, race vehicles, or vehicles used for government or commercial purposes. Also excluded from this warranty are sales outside of the United States of America and Canada.

ICON Vehicle Dynamics' obligation under this warranty is limited to the repair or replacement, at ICON Vehicle Dynamics' discretion, of the defective product. Any and all costs of removal, installation or re-installation, freight charges and incidental or consequential damages are expressly excluded from this warranty. Items that are subject to wear are not considered defective when worn and are not covered.

ICON Vehicle Dynamics components must be installed as a complete kit as shown in our current application guide. Any substitutions or exemptions of required components will immediately void the warranty. Some finish damage may happen to parts during shipping and is not covered under warranty.

This warranty is expressly in lieu of all other warranties expressed or implied. This warranty shall not apply to any product that has been improperly installed, modified or customized subject to accident, negligence, abuse or misuse.

To send a shock in for warranty please visit our website http://www.iconvehicledynamics.com/tech-support/shock-service/

ICON VEHICLE DYNAMICS®
PERFORMANCE SUSPENSION SYSTEMS AND SHOCK ABSORBERS

7929 Lincoln Ave. Riverside, CA 92504 Phone: 951.689.ICON Fax: 951.689.1016
www.iconvehicledynamics.com

FOLLOW US ON FACEBOOK!

trailfortress.com/stage-1-tubular-uca-suspension-system-ford-f150-icon-vehicle-dynamics-k93141t