ICON Vehicle Dynamics K53222 Installation Instructions

K53222

Part number: K53222

trailfortress.com/icon-vehicle-dynamics-05-23-tacoma-0-2-stage-3-exp-suspension-system-billet-k53222

Scan for fitment, price and install help

7929 Lincoln Ave. Riverside, CA 92504
Phone: 951.689.ICON | Fax: 951.689.1016

58632 INSTALLATION INSTRUCTIONS

12-29-2022 REV.B

PART #	DESCRIPTION
58632	05-UP TACOMA FRONT 2.5 EXP COILOVER

COMPONENTS INCLUDED

(1) 150137 05-UP TACOMA BEAUTY PLATE
(1) 154035 05-UP TACOMA EXP UPPER MOUNT ASM
(1) 154878 05-UP TACOMA FRONT 2.5 IR EXP COILOVER UNPKG
(1) 294060 EXP COIL MOUNT KIT
(1) 605968 VIBRATITE BLUE 2ML BULLET

HARDWARE INCLUDED

(2) 290017 WASHER 1.4" X .425" X .25" BLACK ZINC

TOOLS REQUIRED

JACK
JACK STANDS
PLIERS
PRY BAR
RATCHET
CUTOFF WHEEL
COIL SPRING COMPRESSOR
CIRCLIP RETAINING RING PLIERS
10 SOCKET / WRENCH
12 SOCKET / WRENCH
14 SOCKET / WRENCH
17 SOCKET / WRENCH
19 SOCKET / WRENCH

TECH NOTES

1. YOUR ICON COILOVER ASSEMBLIES COME FACTORY CHARGED TO 250 PSI. RELEASING NITROGEN PRESSURE MAY LEAD TO SHOCK MALFUNCTION AND REDUCED RIDE QUALITY. FAILURE CAUSED BY LOW NITROGEN PRESSURE IS NOT COVERED UNDER ICON'S WARRANTY POLICY.

2. A GOOD CIRCLIP RING PLIERS WILL MAKE INSTALLATION EASIER AND REDUCE THE CHANCE OF SCRATCHING THE SHOCK BODY. KNIPEX 4521200 CIRCLIP PLIERS HAVE PROVEN TO BE A GOOD FIT.

3. SEE PAGE 9 FOR EXP SHOCK GROOVE SPECS.

4. INSTALL TIME: 3-4 HOURS

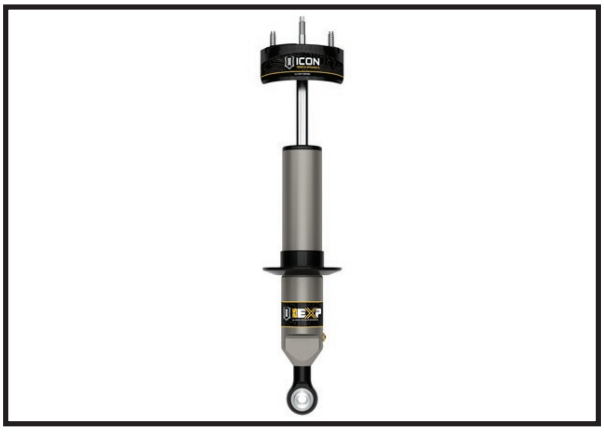

WARNING!

*** READ ALL INSTRUCTIONS THOROUGHLY FROM START TO FINISH BEFORE BEGINNING INSTALLATION! IF THESE INSTRUCTIONS ARE NOT PROPERLY FOLLOWED SEVERE FRAME, SUSPENSION AND TIRE DAMAGE MAY RESULT TO THE VEHICLE!*

*** ICON VEHICLE DYNAMICS RECOMMENDS THAT YOU EXERCISE EXTREME CAUTION WHEN WORKING UNDER A VEHICLE THAT IS SUPPORTED WITH JACK STANDS.*

*** ICON VEHICLE DYNAMICS RECOMMENDS ALL INSTALLATION TO BE PERFORMED BY A PROFESSIONAL SHOP/SERVICE TECHNICIAN. PRODUCT FAILURE CAUSED BY IMPROPER INSTALLATION WILL NOT BE COVERED UNDER ICON'S WARRANTY POLICY.*

INSTALLATION

1. Using a properly rated jack, raise the front of the vehicle and support the frame rails with jack stands. Ensure the jack stands are secure and set properly before lowering the jack. Remove the front wheels and tires. NEVER WORK UNDER AN UNSUPPORTED VEHICLE.

2. Remove the 4 bolts holding the front skid plate on using a 12mm.

3. Remove the sway bar linkage from the spindle using a 17mm. **[FIGURE 1]**

4. Remove the front cross members to allow the sway bar to be removed. There are three 17mm bolts holding each cross member to the frame.

5. Remove the sway bar brackets and sway bar using a 14mm. **[FIGURE 2]**

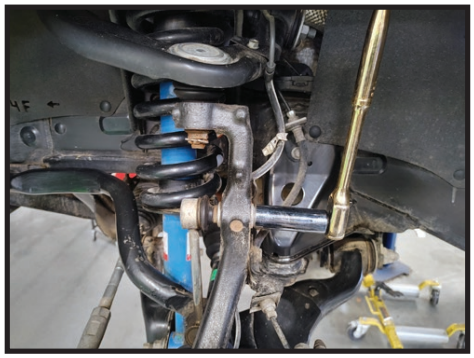

FIG.1



FIG.2

trailfortress.com/icon-vehicle-dynamics-05-23-tacoma-0-2-stage-3-exp-suspension-system-billet-k53222

6. **Remove the tie rod from the spindle. The cotter pin needs to be removed with a pliers, then using a 19mm to loosen the nut and remove it. To dislodge the tie rod from the spindle a hammer or air hammer can be used to strike the side of the mount, as shown. [FIGURE 3, 4, 5, 6]**

FIG.3



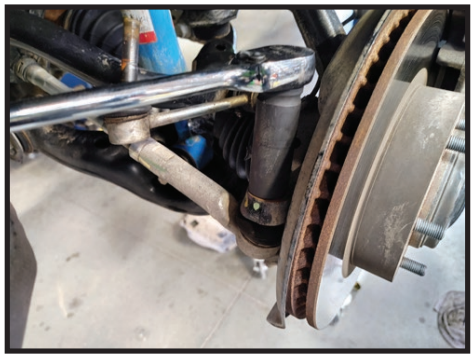

FIG.4

FIG.5



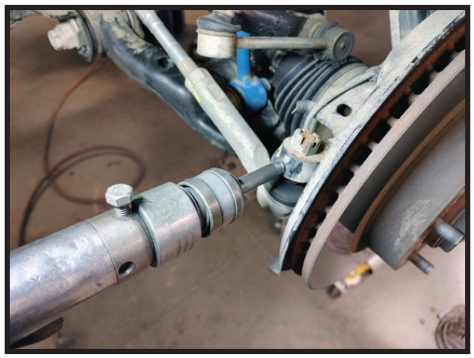

FIG.6

7. **Remove the 3 nuts from the top of the factory coilover mount using a 14mm. (Do not remove the large center nut as personal injury and damage could occur). [FIGURE 7]**

FIG.7



8. **Remove the lower coilover mounting bolt and nut using a 19mm. You may need to push down or raise the suspension to get the bolt out, once the nut is removed. [FIGURE 8]**

FIG.8

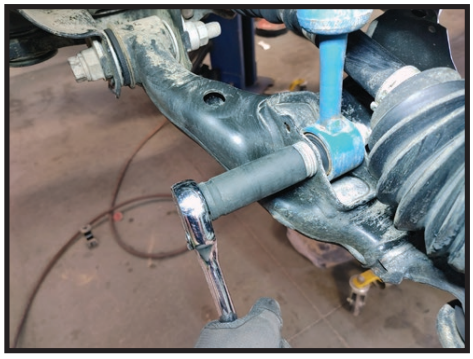

9. To remove the factory coilover, you may need to push down on the suspension. For 4wd trucks, turning the spindle may help the lower shock eyelet clear the CV boot while removing the shock from the arm. With the lower eyelet removed, pull the shock down and away from the vehicle.

10. Next, you will be removing the factory coil spring from the factory shock. You will be reusing the bushings and upper spring rubber isolator.

11. Use a spring compressor to compress the coil spring. **[FIGURE 9]**

FIG.9



12. Use a 17mm to remove the nut that holds the coil spring and upper mount on the shock. The factory 14mm nut will be reused. **[FIGURE 10]**

FIG.10

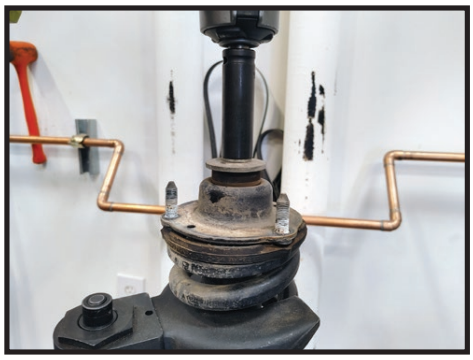

13. Now you can remove the upper mount, bushings and washers from the shock. Also remove the coil spring and set the factory shock aside. Take the factory upper mount and press the bushing out of it. A suitable socket or tube can be used and a hammer. It does not take much force to remove. **[FIGURE 11]**

FIG.11

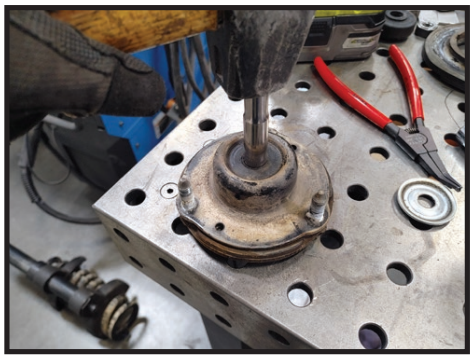

14. Take that bushing that you just pressed out and press it into the new ICON upper mount.

15. Place in a vice to help with installation of the coil spring.

16. Take the supplied circlip and use the external snap ring pliers to spread it and slide it down the shock, into the groove of your choice. Refer to the graphic. Please see page 9 for Groove Specs. **[FIGURE 12]**

FIG.12



17. Next, slide the ICON coil seat over the shock until it sits on the circlip. Remove the factory rubber isolator from the factory upper mount and slip it onto the ICON coil seat. **[FIGURE 13 & 14]**

FIG.13





FIG.14

18. Place the factory coil spring onto the new ICON shock, rotated 180 degrees, so the flat side of the coil spring sits on the rubber isolator. **[FIGURE 15]**

FIG.15



19. Compress the coil spring until the factory washer, ICON upper mount and bushing, factory bushing and washer can be installed. Then thread the nut on and tighten until 4 threads are showing. Apply thread locker to the threads of the nut before installing. **[FIGURE 16, 17, 18, 19]**

FIG.16





FIG.17

FIG.18



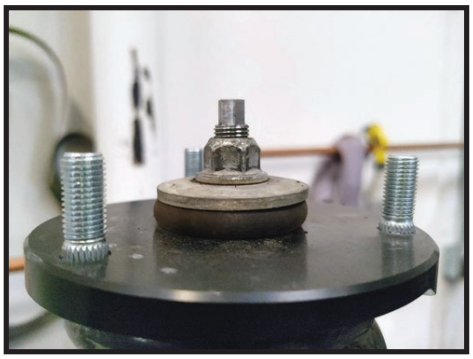

FIG.19

20. Make sure the pigtail (end) of the coil spring is lined up with the upper mount before releasing the spring compressor. **[FIGURE 20]**

FIG.20



21. Rotate the upper mount so that when the shock is installed, the coil spring bows inward towards the frame. This will help with install if still running a stock upper control arm.

22. Before installing the new coilover assembly, the ABS/Brake line bracket needs to be modified to clear the larger coilover. Remove the ABS line bracket using a 10mm. **[FIGURE 21]**

FIG.21



23. Use a cut off wheel and cut the portion of the larger brake line bracket off at the bend, as pictured. Be careful not to cut the brake like or ABS line. **[FIGURE 22]**

FIG.22



trailfortress.com/icon-vehicle-dynamics-05-23-tacoma-0-2-stage-3-exp-suspension-system-billet-k53222

24. Remove the bracket that is attached to the ABS line. Cut the zip tie and pry open the pinch clamp. **[FIGURE 23 & 24]**

FIG.23





FIG.24

25. Remove the clip on the lower portion of the brake line bracket and place it on the backside of the bracket into the same hole. **[FIGURE 25 & 26]**

FIG.25





FIG.26

26. Remove the 12mm bolt holding the brake line bracket to the spindle. Secure the supplied adel clamp on top of the bracket with the factory bolt. Make sure the ABS line runs thru the adel clamp. **[FIGURE 27 & 28]**

FIG.27





FIG.28

27. Install the new ICON coilover into position. Aligning the 3 studs with the 3 holes in the factory frame mount. Then swinging the lower eyelet into the lower arm pocket. The lower spacers are different lengths. The longer spacer goes towards the rear of the truck. Tighten all nuts and bolts to factory specs. **[FIGURE 29 & 30]**

FIG.29

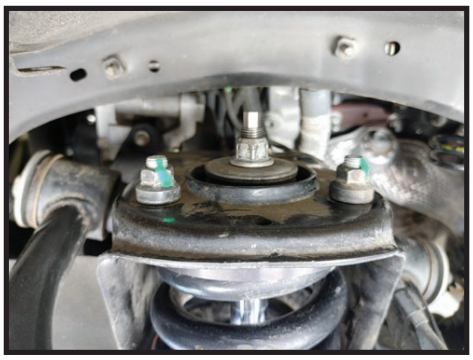



FIG.30

trailfortress.com/icon-vehicle-dynamics-05-23-tacoma-0-2-stage-3-exp-suspension-system-billet-k53222

28. Remove factory bump stop from the frame and install the supplied 5/16" thick washer between the bump stop and frame. Apply thread locker to the threads of the bump stop and tighten back onto the frame. **[FIGURE 31]**

FIG.31



29. Reinstall the tie rod, nut and cotter pin. [Torque to factory spec].

30. Reinstall the sway bar, if the ICON sway bar relocation kit was purchased, refer to those instructions for proper install.

31. Reinstall the sway bar links into the spindle. [Torque the nut to factory spec].

32. Repeat all steps on opposite side.

33. Be sure all nuts and bolts are tight. Reinstall wheels and tires. Torque lug nuts.

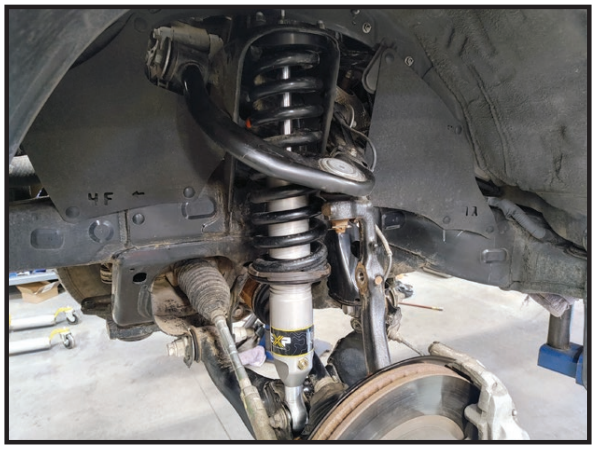

VERIFY ALL FASTENERS ARE PROPERLY TORQUED BEFORE DRIVING VEHICLE.

RETORQUE ALL NUTS, BOLTS AND LUGS AFTER 100 MILES AND PERIODICALLY THEREAFTER.

2.5 VS SERIES SHOCK & COILOVER TECHNICAL INFORMATION

MAINTENANCE

ICON shock absorbers are a high quality rebuildable race style shock absorber designed for optimal performance. With a unit of this caliber on your vehicle, routine maintenance is required to keep them looking and operating in like new condition. Residual oil and assembly lube may be present at all seal paths from the factory out of the box and is considered normal. Pooling of oil however is not acceptable at any time and one should contact the ICON dealer where purchased.

BELOW ARE GUIDELINES BASED ON HOW YOU USE YOUR VEHICLE BUT YOUR MILEAGE MAY VARY:

STREET USE:

- Send in for factory servicing every 40,000 miles or if a leak develops, ride quality decreases, or they begin to make excessive noise.
- Remove any buildup of road salt, mud, or debris from shocks and coil springs anytime accrued
- Clean with mild soap and water with each oil change or anytime you notice build up.
- Wax the cylinders yearly with automotive wax to prevent corrosion.
- Check nitrogen pressure yearly. (252004 charge needle assembly available at any ICON distributor)
- Check bearings for excessive wear yearly.
- **DO NOT** apply any type of lube to the upper and lower bearings.

STREET/DIRT:

- Send in for factory servicing every 15,000 miles or if a leak develops, ride quality decreases, or they begin to make excessive noise.
- Clean with mild soap and water with each oil change, offroad trip, or anytime you notice build up.
- Wax the cylinders yearly with automotive wax to prevent corrosion.
- Check nitrogen pressure each dirt outing. (252004 charge needle assembly available at any ICON distributor)
- Check bearings for excessive wear yearly.
- **DO NOT** apply any type of lube to the upper and lower bearings.

DIRT USE:

- Send in for factory servicing every 1,000 miles.
- Check nitrogen pressure each outing. (252004 charge needle assembly available at any ICON distributor)
- Remove any buildup of mud or debris from shocks and coil springs after every outing.

SELF-SERVICE:

- Contact ICON for service kits & tools at (951) 689-4266.

PRODUCT REGISTRATION

Please visit: http://www.iconvehicledynamics.com/tech-support/registration/ to register your product.

ICON VEHICLE DYNAMICS SHOCK ABSORBER WARRANTY

This shock absorber has a 1 year warranty against any manufacturer's defects. If a shock fails within the initial year of ownership, the shock must be shipped to ICON Vehicle Dynamics for inspection and service. If a shock is inspected and it has been determined the shock failed due to neglect, damage caused by improper installation or any other reason besides "normal wear and tear", the owner of said shock is responsible for all service costs. This includes labor, parts, and shipping.

ICON Vehicle Dynamics warrants to the original retail purchaser who owns the vehicle on which the product was originally installed. ICON Vehicle Dynamics does not warrant the product for finish, alterations, modifications and/or installation contrary to ICON Vehicle Dynamics instructions. ICON Vehicle Dynamics products are not designed, nor are they intended to be installed on vehicles used in race applications, for racing purposes or for similar activities. (A "race" is defined as any contest between two or more vehicles, or a contest of one or more vehicles against the clock, whether or not such contest is for a prize). This warranty does not include coverage for police or taxi vehicles, race vehicles, or vehicles used for government or commercial purposes. Also excluded from this warranty are sales outside of the United States of America and Canada.

ICON Vehicle Dynamics' obligation under this warranty is limited to the repair or replacement, at ICON Vehicle Dynamics' discretion, of the defective product. Any and all costs of removal, installation or re-installation, freight charges and incidental or consequential damages are expressly excluded from this warranty. Items that are subject to wear are not considered defective when worn and are not covered.

ICON Vehicle Dynamics components must be installed as a complete kit as shown in our current application guide. Any substitutions or exemptions of required components will immediately void the warranty. Some finish damage may happen to parts during shipping and is not covered under warranty.

This warranty is expressly in lieu of all other warranties expressed or implied. This warranty shall not apply to any product that has been improperly installed, modified or customized subject to accident, negligence, abuse or misuse.

To send a shock in for warranty please visit our website http://www.iconvehicledynamics.com/tech-support/shock-service/

ICON VEHICLE DYNAMICS®
PERFORMANCE SUSPENSION SYSTEMS AND SHOCK ABSORBERS

7929 Lincoln Ave. Riverside, CA 92504 Phone: 951.689.ICON Fax: 951.689.1016
www.iconvehicledynamics.com

FOLLOW US ON FACEBOOK!

trailfortress.com/icon-vehicle-dynamics-05-23-tacoma-0-2-stage-3-exp-suspension-system-billet-k53222

ICON TACOMA FRONT EXP GROOVE SPECS

FENDER TO HUB MEASUREMENT

FACTORY
RIDE HEIGHT: **21”**

MAXIMUM
RIDE HEIGHT: **23”**

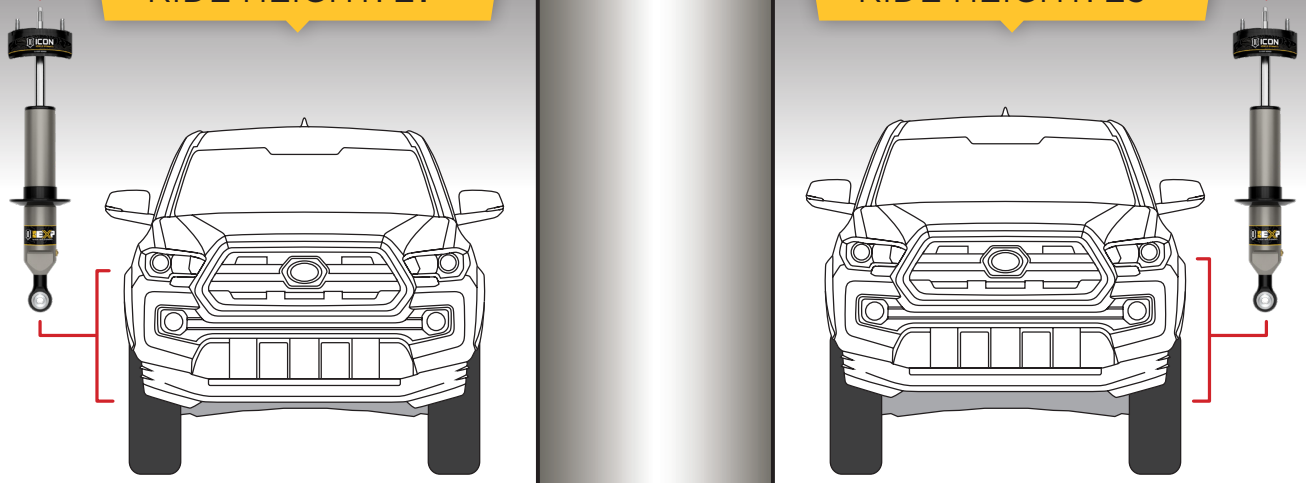

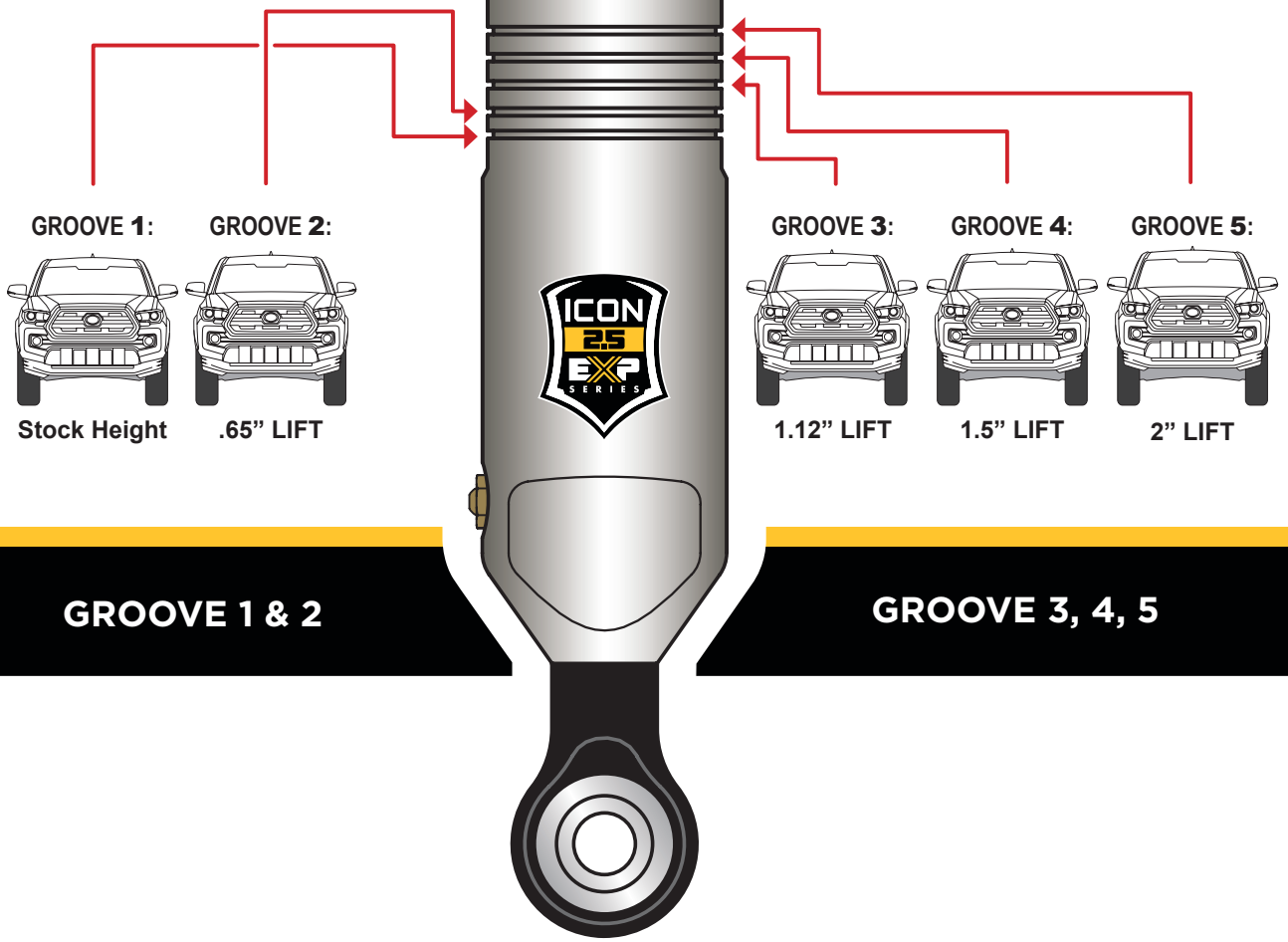

GROOVE 1 & 2

GROOVE 3, 4, 5

trailfortress.com/icon-vehicle-dynamics-05-23-tacoma-0-2-stage-3-exp-suspension-system-billet-k53222