ICON Vehicle Dynamics K40012T Installation Instructions

HOSS 2.0 Stage 2 Suspension System, Tubular, Ford Bronco

Part number: K40012T

trailfortress.com/icon-vehicle-dynamics-21-23-bronco-hoss-2-0-pkg-0-2-lift-stage-2-suspension-system-tubular-k4

Scan for fitment, price and install help

ICON VEHICLE DYNAMICS®
7929 Lincoln Ave. Riverside, CA 92504
Phone: 951.689.ICON | Fax: 951.689.1016

48602 INSTALLATION INSTRUCTIONS

10-20-2022 REV.D

PART #	DESCRIPTION
48602	21-UP BRONCO HOSS 2.0 PKG 2.5 EXP FRONT COILOVER

COMPONENTS INCLUDED

144934 21-UP BRONCO FRONT C/O 2.5 EXP IR UNPKG

HARDWARE INCLUDED

(1) 140004 2.5 EXP BEAUTY PLATE
(1) 148010 21-UP BRONCO URETHANE COIL SEAT
(1) 294060 EXP COIL MOUNT KIT
(1) 605360 1/2-20 FLANGED NYLOCK NUT GR8
(1) 611080 FORD CO HARDWARE KIT SINGLE

TOOLS REQUIRED

JACK
JACK STANDS
TORQUE WRENCH
RATCHET
EXTENSIONS
SPRING COMPRESSOR
PRY BAR
FLAT BLADE SCREWDRIVER
EXTERNAL SNAP RING PLIERS
DRILL
1/2" DRILL BIT
5/8" SOCKET / WRENCH
3/4" SOCKET / WRENCH
8MM SOCKET / WRENCH
15MM SOCKET / WRENCH
18MM SOCKET / WRENCH
21MM SOCKET / WRENCH
24MM SOCKET / WRENCH

TECH NOTES

1. SPRING PERCH LEVEL PER MODEL/TRIM, SASQUATCH, NON-SAS, OUTBANKS, ETC.

2. IF RUNNING 37" TIRES, USE PART# 611082.

3. ESTIMATED INSTALL TIME: 3 HOURS



WARNING!

*** READ ALL INSTRUCTIONS THOROUGHLY FROM START TO FINISH BEFORE BEGINNING INSTALLATION! IF THESE INSTRUCTIONS ARE NOT PROPERLY FOLLOWED SEVERE FRAME, SUSPENSION AND TIRE DAMAGE MAY RESULT TO THE VEHICLE!*

*** ICON VEHICLE DYNAMICS RECOMMENDS THAT YOU EXERCISE EXTREME CAUTION WHEN WORKING UNDER A VEHICLE THAT IS SUPPORTED WITH JACK STANDS.*

*** ICON VEHICLE DYNAMICS RECOMMENDS ALL INSTALLATION TO BE PERFORMED BY A PROFESSIONAL SHOP/SERVICE TECHNICIAN. PRODUCT FAILURE CAUSED BY IMPROPER INSTALLATION WILL NOT BE COVERED UNDER ICON'S WARRANTY POLICY.*

INSTALLATION

1. Lift vehicle and securely place heavy duty jack stands under the manufacturer recommended lifting locations for the front of the vehicle. Take care when lifting the vehicle, and allow 3-4" of ground clearance from the tire. Remove front tires. NEVER WORK UNDER AN UNSUPPORTED VEHICLE. Remove the wheels.

2. Disconnect sway bar from both lower control arms using a 6mm and 21mm wrench. Rotate sway bar and links up away from the lower arm. **[FIGURE 1]**



FIG.1

3. Remove the sway bar skid plate to gain access to the sway bar brackets (4 x 15mm bolts). **[FIGURE 2]**

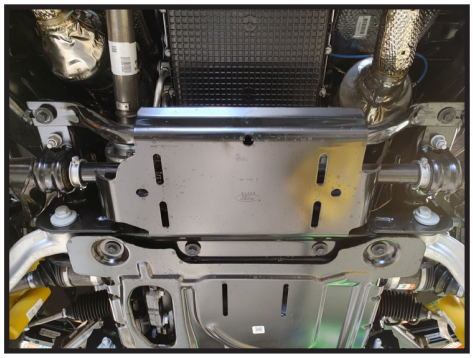

FIG.2

trailfortress.com/icon-vehicle-dynamics-21-23-bronco-hoss-2-0-pkg-0-2-lift-stage-2-suspension-system-tubular-k40012t

4. Remove one side of the sway bar from the frame to gain access to the lower control arm bolts (18mm). **[FIGURE 3]**

FIG.3

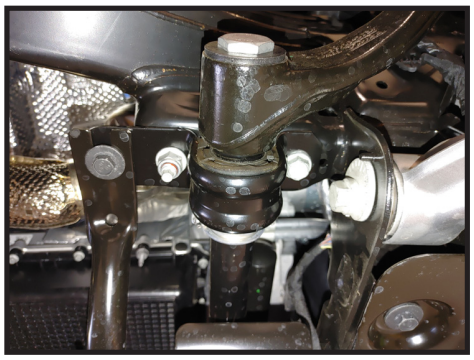

5. Support the lower control arm and remove the bolts from the frame. Remove the 15mm nuts from the top of the coilover. **[FIGURE 4]**

FIG.4



6. Remove the 18mm nuts from the bottom of the coilover. **[FIGURE 5]**

FIG.5



7. Remove the lower control arm pivot bolts using a 24 and 21mm. Lower the arm down so the coilover can be removed. Mark the coil if the tag has been removed. The tag/mark should be facing the frame. You may need to pry on the arm/coilover to get the lower studs out of the arm **[FIGURE 6]**

FIG.6



8. With the stock coilover removed, use a spring compressor and 18mm socket to remove the spring. If the threads on the top of the shaft are rusted, apply a little WD-40 or similar lubricant to help with the nut removal. Make note of the orientation of the upper mount and the locating pin. **[FIGURE 7]**

FIG.7

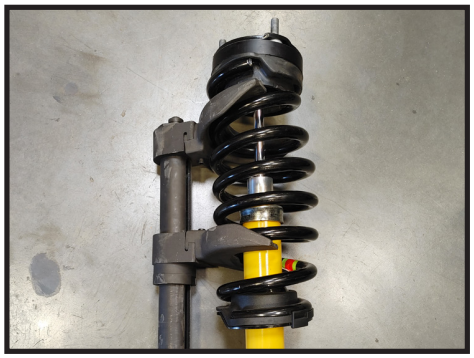

9. Set the factory coilover aside. Grab the new Icon EXP coilover and install the spring perch snap ring, spring perch and spring isolator. Refer to page 7 for the groove options for your particular Bronco and trim level. **[FIGURE 8, 9, 10, 11]**

FIG.8





FIG.9

FIG.10





FIG.11

10. If running 37" tires tall tires, remove the spacer on top of the foam bump stop and install part# 611082. **[FIGURE 12 & 13]**

FIG.12





FIG.13

11. Install the factory coil spring onto the body in the same direction as factory. The tag/mark on the coil should be facing the frame when installed on the truck. Make sure the spring is sitting correctly on the spring isolator. The front of the Icon EXP can be determined by the lower barpin, the short end faces the front, the longer end faces the rear. **[FIGURE 14]**

FIG.14



12. Take the factory upper mount and drill out the center hole to 1/2". **[FIGURE 15]**

FIG.15

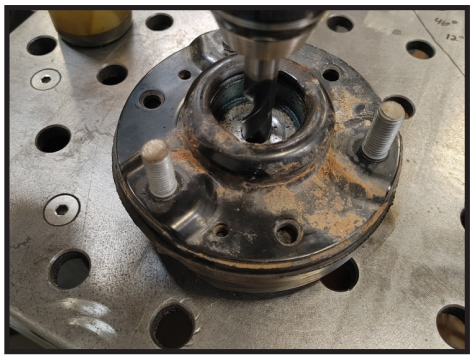

13. With the spring on the shock, compress it down until the threads of the shaft are visible and the upper mount can be installed. **[FIGURE 16]**

FIG.16



14. Install the upper mount onto the shaft and make sure the orientation is correct and the same as factory. Also be sure the isolator is positioned correctly with the spring. **[FIGURE 17]**

FIG.17



15. Install and tighten the 1/2-20 flanged nylock nut to 40 ft-lbs. An 8mm wrench can be used to keep the shaft from spinning.

16. Remove the spring compressor.

17. Install the Icon EXP, positioning the upper mount first and lining up the 3 studs and one locating pin, loosely install the 3 nuts. Then position the lower bar-pin into place, making sure the longer part of the bar-pin is facing the rear of the vehicle. Install the 7/16" hardware as shown. [Torque to 50 ft-lbs]. **[FIGURE 18, 19, 19a]**

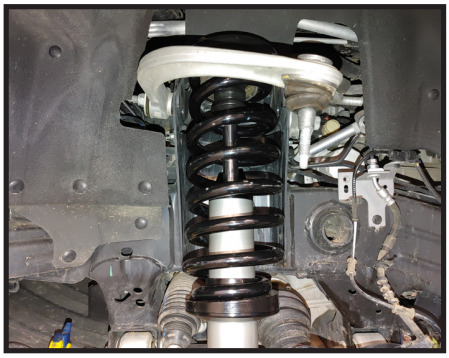

FIG.18

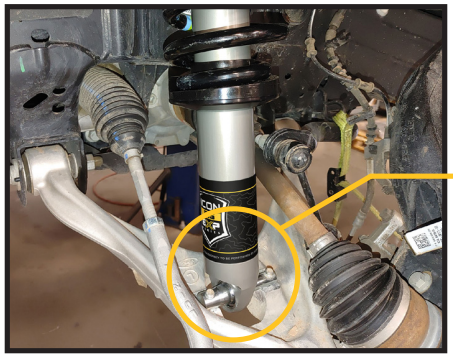

FIG.19

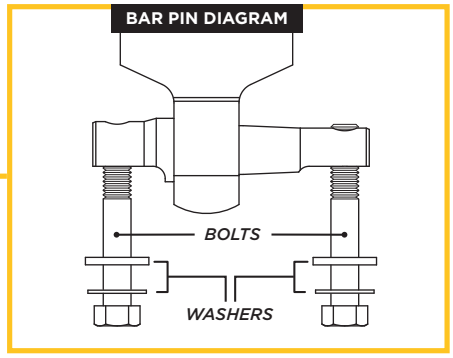

FIG.19a

18. Reconnect the lower control pivots into the frame. Snug the bolts up, they will need to be tightened once the vehicle is back on its own weight.

19. With the lower arm back in place, remove the nuts on the upper mount, and install the beauty plate as shown. Tighten the 15mm nuts to factory spec. **[FIGURE 20 & 21]**

FIG.20





FIG.21

20. If the tie rod was removed, reconnect it now with a 21mm.

21. If the upper control arm was removed, reconnect it with a 18mm. If an Icon UCA was purchased, refer to those instructions now for proper install.

22. Reconnect the swaybar in reverse order of removal. **[FIGURE 22]**

FIG.22



23. Repeat process on passenger side.

24. Get vehicle professionally aligned.

VERIFY ALL FASTENERS ARE PROPERLY TORQUED BEFORE DRIVING VEHICLE.

RETORQUE ALL NUTS, BOLTS AND LUGS AFTER 100 MILES AND PERIODICALLY THEREAFTER.

trailfortress.com/icon-vehicle-dynamics-21-23-bronco-hoss-2-0-pkg-0-2-lift-stage-2-suspension-system-tubular-k40012t

2.5 VS SERIES SHOCK & COILOVER TECHNICAL INFORMATION

MAINTENANCE

ICON shock absorbers are a high quality rebuildable race style shock absorber designed for optimal performance. With a unit of this caliber on your vehicle, routine maintenance is required to keep them looking and operating in like new condition. Residual oil and assembly lube may be present at all seal paths from the factory out of the box and is considered normal. Pooling of oil however is not acceptable at any time and one should contact the ICON dealer where purchased.

BELOW ARE GUIDELINES BASED ON HOW YOU USE YOUR VEHICLE BUT YOUR MILEAGE MAY VARY:

STREET USE:

- Send in for factory servicing every 40,000 miles or if a leak develops, ride quality decreases, or they begin to make excessive noise.
- Remove any buildup of road salt, mud, or debris from shocks and coil springs anytime accrued
- Clean with mild soap and water with each oil change or anytime you notice build up.
- Wax the cylinders yearly with automotive wax to prevent corrosion.
- Check nitrogen pressure yearly. (252004 charge needle assembly available at any ICON distributor)
- Check bearings for excessive wear yearly.
- DO NOT apply any type of lube to the upper and lower bearings.

STREET/DIRT:

- Send in for factory servicing every 15,000 miles or if a leak develops, ride quality decreases, or they begin to make excessive noise.
- Clean with mild soap and water with each oil change, offroad trip, or anytime you notice build up.
- Wax the cylinders yearly with automotive wax to prevent corrosion.
- Check nitrogen pressure each dirt outing. (252004 charge needle assembly available at any ICON distributor)
- Check bearings for excessive wear yearly.
- DO NOT apply any type of lube to the upper and lower bearings.

DIRT USE:

- Send in for factory servicing every 1,000 miles.
- Check nitrogen pressure each outing. (252004 charge needle assembly available at any ICON distributor)
- Remove any buildup of mud or debris from shocks and coil springs after every outing.

SELF-SERVICE:

- Contact ICON for service kits & tools at (951) 689-4266.

PRODUCT REGISTRATION

Please visit: http://www.iconvehicledynamics.com/tech-support/registration/ to register your product.

ICON VEHICLE DYNAMICS SHOCK ABSORBER WARRANTY

This shock absorber has a 1 year warranty against any manufacturer's defects. If a shock fails within the initial year of ownership, the shock must be shipped to ICON Vehicle Dynamics for inspection and service. If a shock is inspected and it has been determined the shock failed due to neglect, damage caused by improper installation or any other reason besides "normal wear and tear", the owner of said shock is responsible for all service costs. This includes labor, parts, and shipping.

ICON Vehicle Dynamics warrants to the original retail purchaser who owns the vehicle on which the product was originally installed. ICON Vehicle Dynamics does not warrant the product for finish, alterations, modifications and/or installation contrary to ICON Vehicle Dynamics instructions. ICON Vehicle Dynamics products are not designed, nor are they intended to be installed on vehicles used in race applications, for racing purposes or for similar activities. (A "race" is defined as any contest between two or more vehicles, or a contest of one or more vehicles against the clock, whether or not such contest is for a prize). This warranty does not include coverage for police or taxi vehicles, race vehicles, or vehicles used for government or commercial purposes. Also excluded from this warranty are sales outside of the United States of America and Canada.

ICON Vehicle Dynamics' obligation under this warranty is limited to the repair or replacement, at ICON Vehicle Dynamics' discretion, of the defective product. Any and all costs of removal, installation or re-installation, freight charges and incidental or consequential damages are expressly excluded from this warranty. Items that are subject to wear are not considered defective when worn and are not covered.

ICON Vehicle Dynamics components must be installed as a complete kit as shown in our current application guide. Any substitutions or exemptions of required components will immediately void the warranty. Some finish damage may happen to parts during shipping and is not covered under warranty.

This warranty is expressly in lieu of all other warranties expressed or implied. This warranty shall not apply to any product that has been improperly installed, modified or customized subject to accident, negligence, abuse or misuse.

To send a shock in for warranty please visit our website http://www.iconvehicledynamics.com/tech-support/shock-service/

ICON VEHICLE DYNAMICS®
PERFORMANCE SUSPENSION SYSTEMS AND SHOCK ABSORBERS

7929 Lincoln Ave. Riverside, CA 92504 Phone: 951.689.ICON Fax: 951.689.1016
www.iconvehicledynamics.com

FOLLOW US ON FACEBOOK!

trailfortress.com/icon-vehicle-dynamics-21-23-bronco-hoss-2-0-pkg-0-2-lift-stage-2-suspension-system-tubular-k40012t

ICON BRONCO FRONT EXP GROOVE SPECS

FENDER TO HUB MEASUREMENT

(FENDER FLARE REMOVED)

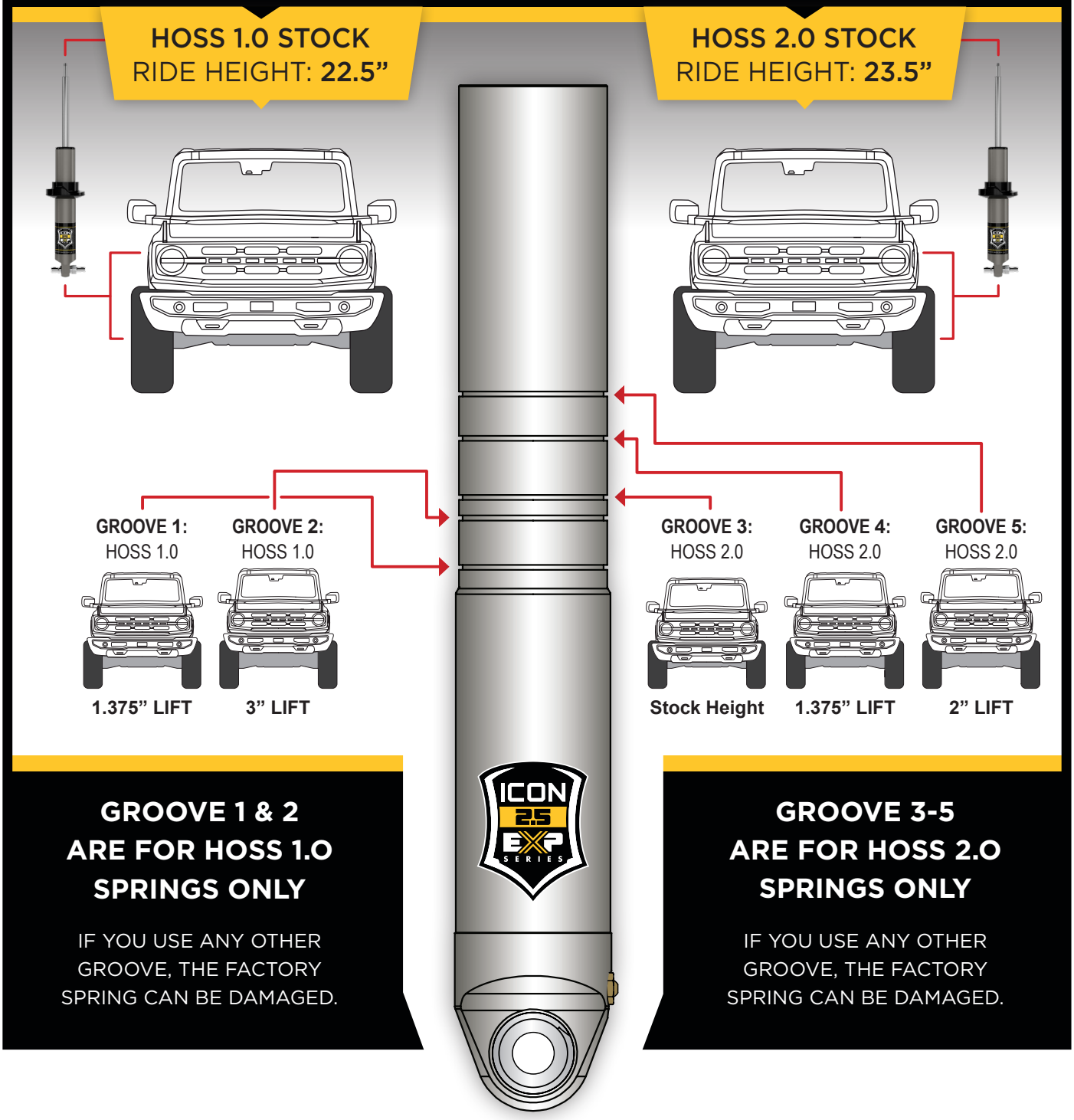

GROOVE 1 & 2 ARE FOR HOSS 1.0 SPRINGS ONLY

IF YOU USE ANY OTHER GROOVE, THE FACTORY SPRING CAN BE DAMAGED.

GROOVE 3-5 ARE FOR HOSS 2.0 SPRINGS ONLY

IF YOU USE ANY OTHER GROOVE, THE FACTORY SPRING CAN BE DAMAGED.

trailfortress.com/icon-vehicle-dynamics-21-23-bronco-hoss-2-0-pkg-0-2-lift-stage-2-suspension-system-tubular-k40012t