ICON Vehicle Dynamics 58400DJ Installation Instructions

Tubular Upper Control Arm Kit with Delta Joints, Tacoma & 4Runner

Part number: 58400DJ

trailfortress.com/icon-vehicle-dynamics-96-04-tacoma-96-02-4rnr-tubular-uca-dj-kit-58400dj

Scan for fitment, price and install help

ICON VEHICLE DYNAMICS®
7929 Lincoln Ave. Riverside, CA 92504
Phone: 951.689.ICON | Fax: 951.689.1016

58400DJ INSTALLATION INSTRUCTIONS

9-19-2019 REV.C

PART #	DESCRIPTION
58400DJ	96-04 TACOMA/96-02 4RUNNER TUBULAR DJ UCA KIT

COMPONENTS INCLUDED

(1) 154104 96-04 TACOMA UCA (DRVR)	(1) 154105 96-04 TACOMA UCA (PASS)

HARDWARE INCLUDED

(8) 150025 WASHER 2.125 X .565 X .188 (2) 157517BJ TACOMA DELTA JOINT (2) 157527 96-04 DJ ADAPTER TOP (2) 157528 96-04 DJ ADAPTER BOTTOM (4) 159200 SLEEVE 1.000 X .563 X 1.830 (8) 297034 HAT BUSHING 1.625 X 1.000 X .850 (4) 605053 1/4 FLAT WASHER	(1) 605303 1/2-13 X 2.000 BOLT (1) 605346 1/2-13 FINISH NUT (1) 605347 WASHER 1.500 X .531 X .11 (1) 605348 WASHER 1.00 X .531 X .056 (2) 605800 M6-1.0 FLANGE NUT (2) 605862 M6-1.0 X 25MM SHSS 18-8

TOOLS REQUIRED

JACK JACK STANDS TORQUE WRENCH BALL JOINT PRESS PICK	BALL JOINT SEPARATOR 10MM SOCKET / WRENCH 19MM SOCKET / WRENCH 21MM SOCKET / WRENCH

TECH NOTES

1. ICON RECOMMENDS OPTIONAL BILLET DUST COVER SET (191011) TO PREVENT DEBRIS FROM PACKING UP AROUND THE ZERK FITTING.

2. ALL ICON UPPER CONTROL ARMS HAVE BEEN ENGINEERED TO ALLOW FOR THE MOST POSSIBLE CASTER, WHILE STILL ALLOWING THE VEHICLE TO BE PROPERLY ALIGNED. NOTIFY YOUR PROFESSIONAL ALIGNMENT SHOP OF THIS INFORMATION SO THAT MAXIMUM RIDE QUALITY CAN BE ACHIEVED.

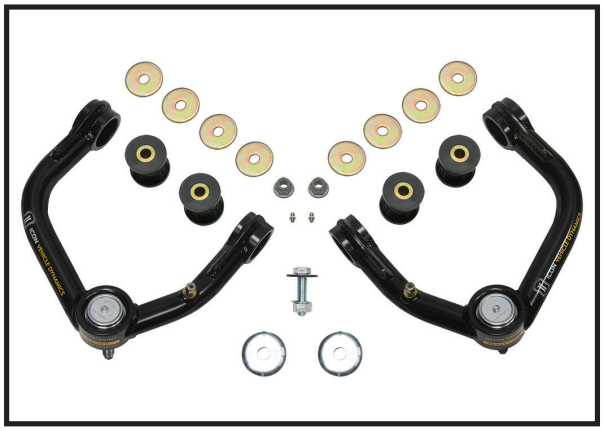

WARNING!

*** READ ALL INSTRUCTIONS THOROUGHLY FROM START TO FINISH BEFORE BEGINNING INSTALLATION! IF THESE INSTRUCTIONS ARE NOT PROPERLY FOLLOWED SEVERE FRAME, SUSPENSION AND TIRE DAMAGE MAY RESULT TO THE VEHICLE!*

*** ICON VEHICLE DYNAMICS RECOMMENDS THAT YOU EXERCISE EXTREME CAUTION WHEN WORKING UNDER A VEHICLE THAT IS SUPPORTED WITH JACK STANDS.*

*** ICON VEHICLE DYNAMICS RECOMMENDS ALL INSTALLATION TO BE PERFORMED BY A PROFESSIONAL SHOP/SERVICE TECHNICIAN. PRODUCT FAILURE CAUSED BY IMPROPER INSTALLATION WILL NOT BE COVERED UNDER ICON'S WARRANTY POLICY.*

INSTALLATION

1. Using a properly rated jack, raise the front of the vehicle and support the frame rails with jack stands. Ensure the jack stands are secure and set properly before lowering the jack. NEVER WORK UNDER AN UNSUPPORTED VEHICLE. Remove the front wheels.

2. Using a jack, slightly lift the lower control arm to prevent the arms from being at full droop.

3. Separate the upper control arm from the ball joint: remove the cotter pin and loosen the castle nut on the top of the upper control arm. Using a ball joint separator, separate the upper arm taper from the ball joint. At this point the spindle is free to move around, do not let the spindle assembly flop to the outside of the vehicle or the CV may pull out. Support spindle with bungee cords or straps. **[FIGURE 1]**

FIG.1

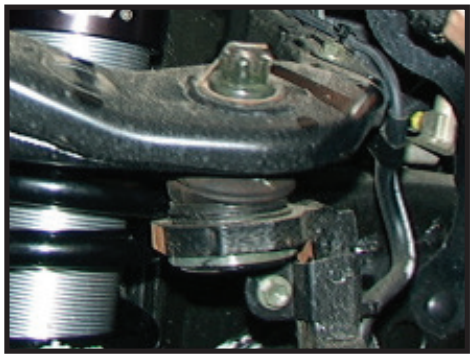

4. Remove the upper control arm: there is a long bolt that runs through both pivots of the upper control arm and the shock tower. Remove the nut and washer from the back of the bolt and start loosening the bolt toward the front of the vehicle. There are some components in the engine compartment that need to be temporarily moved to make room for extraction of the bolt. Some models have an air bag impact sensor bolted on the inside of the front fender well that needs to be moved. On the driver side it may be easier to remove the battery for easier access, but it is not necessary. On the passenger side there are some A/C hard lines that need to be popped out of their retaining clips to allow for removal of the upper control arm bolt.

5. Remove the ball joint from the spindle: remove the snap ring on the top of the spindle that retains the ball joint. The ball joint can be removed by either using a gear puller to push the ball joint down through the spindle, or by driving it out with a dead blow hammer.

trailfortress.com/icon-vehicle-dynamics-96-04-tacoma-96-02-4rnr-tubular-uca-dj-kit-58400dj

6. Before installing your new upper control arms, care must be taken to grease the bushings prior to installing assembly. Failure to grease properly will cause premature bushing wear and increased noise. **[FIGURE 2]** NOTE: Not all bushings include a load ring.

FIG.2

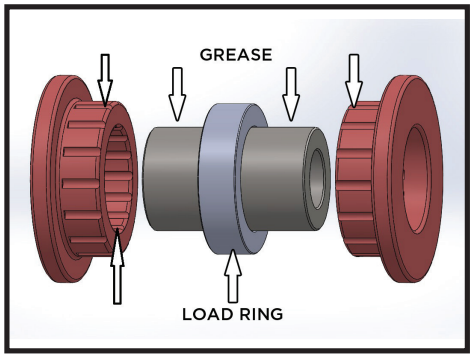

7. Install the Delta Joint adapter. The Delta Joint adapter and lower retainer is designed to pull itself in to the spindle. Position The thick top Delta Joint adapter on top of the knuckle. There is a small step to help start the press fit. Position the bottom retainer and 1/2" bolt as shown, as you tighten the bolt it will pull the Delta Joint adapter into position. Be careful to make sure it presses in straight and fully bottoms the step of the top adapter on the spindle surface. Once the top adapter is in place, remove the bolt and washers. **[FIGURE 3 & 4]**

FIG.3





FIG.4

8. Install the Delta Joint on the Delta Joint Adapter. Make sure the taper of the Delta Joint fits properly in the Delta Joint Adapter. Install the bottom adapter plate and supplied nut. [Torque to 75 ft-lbs] **[FIGURE 5 & 6]**

FIG.5





FIG.6

9. Rotate the arm up to meet the frame pivots. You may need to raise the suspension to aid in alignment.

10. Install the arm with the factory bolt through the pivots and frame mount. Make sure there is a large washer on both sides of the urethane bushings on both pivots (4 per side). [Torque to factory spec]

11. Repeat steps on opposite side.

12. Install wheels and lower vehicle back to the ground. [Torque lugs to factory spec]

13. Have the vehicle professionally aligned.

VERIFY ALL FASTENERS ARE PROPERLY TORQUED BEFORE DRIVING VEHICLE.

RETORQUE ALL NUTS, BOLTS AND LUGS AFTER 100 MILES AND PERIODICALLY THEREAFTER.

ALIGNMENT NOTE
A MAJOR PERFORMANCE ADVANTAGE OF ALL ICON UPPER CONTROL ARMS IS INCREASED CASTER OVER STOCK. DISCUSS WITH A PROFESSIONAL ALIGNMENT SHOP THAT YOU WANT THE VEHICLE ALIGNED WITH THE CASTER AT THE MAX OF THE FACTORY RECOMMENDED SETTINGS IF YOU WANT TO TAKE ADVANTAGE OF THE DYNAMIC EFFECTS OF INCREASED CASTER.

trailfortress.com/icon-vehicle-dynamics-96-04-tacoma-96-02-4rnr-tubular-uca-dj-kit-58400dj



ICON VEHICLE DYNAMICS LIMITED LIFETIME WARRANTY

ICON Vehicle Dynamics warrants to the original retail purchaser who owns the vehicle on which the product was originally installed. ICON Vehicle Dynamics does not warrant the product for finish, alterations, modifications and/or installation contrary to ICON Vehicle Dynamics instructions. ICON Vehicle Dynamics products are not designed, nor are they intended to be installed on vehicles used in race applications, for racing purposes or for similar activities. (A "race" is defined as any contest between two or more vehicles, or a contest of one or more vehicles against the clock, whether or not such contest is for a prize). This warranty does not include coverage for police or taxi vehicles, race vehicles, or vehicles used for government or commercial purposes. Also excluded from this warranty are sales outside of the United States of America and Canada.

ICON Vehicle Dynamics' obligation under this warranty is limited to the repair or replacement, at ICON Vehicle Dynamics' discretion, of the defective product. Any and all costs of removal, installation or re-installation, freight charges and incidental or consequential damages are expressly excluded from this warranty. Items that are subject to wear are not considered defective when worn and are not covered.

ICON Vehicle Dynamics components must be installed as a complete kit as shown in our current application guide. Any substitutions or exemptions of required components will immediately void the warranty. Some finish damage may happen to parts during shipping and is not covered under warranty.

This warranty is expressly in lieu of all other warranties expressed or implied. This warranty shall not apply to any product that has been improperly installed, modified or customized subject to accident, negligence, abuse or misuse.

ICON VEHICLE DYNAMICS®
PERFORMANCE SUSPENSION SYSTEMS AND SHOCK ABSORBERS

7929 Lincoln Ave. Riverside, CA 92504 Phone: 951.689.ICON Fax: 951.689.1016
www.iconvehicledynamics.com

FOLLOW US ON FACEBOOK!

trailfortress.com/icon-vehicle-dynamics-96-04-tacoma-96-02-4rnr-tubular-uca-dj-kit-58400dj