TRAIL FORTRESS

BUILT FOR THE TRAIL. CHECKED FOR YOUR TRUCK.

ICON Vehicle Dynamics 21020 Installation Instructions

Front Adjustable Track Bar Kit for Jeep Wrangler JK (2007-2018)

Part number: 21020

trailfortress.com/icon-vehicle-dynamics-07-18-jk-front-adj-track-bar-kit-21020

Scan for fitment, price and install help

ICON VEHICLE DYNAMICS®
7929 Lincoln Ave. Riverside, CA 92504
Phone: 951.689.ICON | Fax: 951.689.1016

21020 INSTALLATION INSTRUCTIONS

4-29-2020 REV.D

PART #	DESCRIPTION
21020	07-UP JEEP WRANGLER JK ADJUSTABLE FRONT TRACK BAR

COMPONENTS INCLUDED

(1) 124043 JK FRONT ADJ TRACK BAR (1) 157520 L-R ADJ SLEEVE	(2) 217200 HEIM SPACER .565 X 1.625 (1) 295511 JM12T ROD END

HARDWARE INCLUDED

(2) 605145 3/8-16 X 1.00 12 PT BOLT	

TOOLS REQUIRED

TORQUE WRENCH 15MM SOCKET / WRENCH 21MM SOCKET / WRENCH	5/16" SOCKET / WRENCH 3/8" SOCKET WRENCH

TECH NOTES

1. IF USED WITH THE STOCK TRACK BAR BRACKET, TRIMMING IS REQUIRED.

2. DO NOT EXCEED 2.00" ADJUSTMENT FROM THE CENTER OF THE ROD END TO THE EDGE OF THE TRACK BAR PINCH HOUSING. FAILURE CAUSED BY EXCESSIVE ADJUSTMENT WILL NOT BE COVERED UNDER ICON'S WARRANTY POLICY. REFER TO TECH NOTE PHOTO #2.

PRODUCT IMAGE

COMING SOON

WARNING!

*** READ ALL INSTRUCTIONS THOROUGHLY FROM START TO FINISH BEFORE BEGINNING INSTALLATION! IF THESE INSTRUCTIONS ARE NOT PROPERLY FOLLOWED SEVERE FRAME, SUSPENSION AND TIRE DAMAGE MAY RESULT TO THE VEHICLE!*

*** ICON VEHICLE DYNAMICS RECOMMENDS THAT YOU EXERCISE EXTREME CAUTION WHEN WORKING UNDER A VEHICLE THAT IS SUPPORTED WITH JACK STANDS.*

INSTALLATION

1. Remove the stock track bar from the frame and axle using (2) 21mm. Vehicle may shift slightly.

2. Using factory hardware, install the front track bar using a 21mm [Torque to factory spec].

3. The front track bar features a left/right adjusting collar for on vehicle adjustment. The adjustable end goes towards the axle using the factory hardware. The bend should point forward and up allowing for differential clearance.

4. If installing in factory mount, the factory track bar bracket at the axle will need to be clearanced for the pinch block. **[FIGURE 1]**

FIG.1

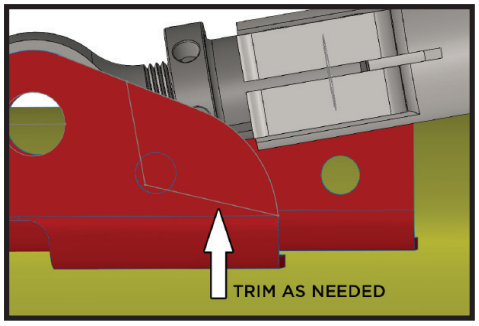

5. Paint exposed metal after trimming.

6. Once installed, the track bar can be adjusted to center the axle. Loosen the pinch bolts using a 3/8" 12pt. Turn collar to desired length. Line up the slit in the collar with the slit in the tube, apply blue thread locker to the pinch bolts and tighten in an opposing pattern. DO NOT OVERTIGHTEN! [Torque pinch bolts to 25 ft-lbs]

7. For final steering wheel alignment, loosen the adjusting collar in the drag link using a 15mm, and adjust as needed [Torque to factory spec]. **FAILURE TO CENTER STEERING WHEEL BEFORE DRIVING WILL RESULT IN COMPUTER STABILITY CONTROL ISSUES.**

VERIFY ALL FASTENERS ARE PROPERLY TORQUED BEFORE DRIVING VEHICLE.

RETORQUE ALL NUTS, BOLTS AND LUGS AFTER 100 MILES AND PERIODICALLY THEREAFTER.

trailfortress.com/icon-vehicle-dynamics-07-18-jk-front-adj-track-bar-kit-21020

[TECH NOTE #2]

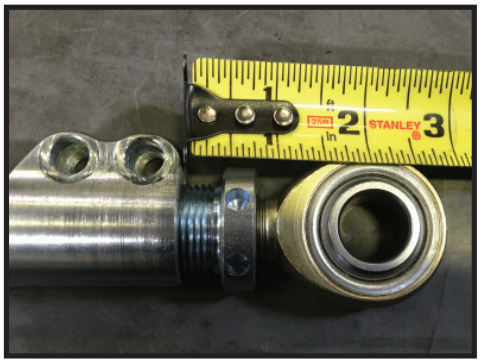

ICON VEHICLE DYNAMICS LIMITED LIFETIME WARRANTY

ICON Vehicle Dynamics warrants to the original retail purchaser who owns the vehicle on which the product was originally installed. ICON Vehicle Dynamics does not warrant the product for finish, alterations, modifications and/or installation contrary to ICON Vehicle Dynamics instructions. ICON Vehicle Dynamics products are not designed, nor are they intended to be installed on vehicles used in race applications, for racing purposes or for similar activities. (A "race" is defined as any contest between two or more vehicles, or a contest of one or more vehicles against the clock, whether or not such contest is for a prize). This warranty does not include coverage for police or taxi vehicles, race vehicles, or vehicles used for government or commercial purposes. Also excluded from this warranty are sales outside of the United States of America and Canada.

ICON Vehicle Dynamics' obligation under this warranty is limited to the repair or replacement, at ICON Vehicle Dynamics' discretion, of the defective product. Any and all costs of removal, installation or re-installation, freight charges and incidental or consequential damages are expressly excluded from this warranty. Items that are subject to wear are not considered defective when worn and are not covered.

ICON Vehicle Dynamics components must be installed as a complete kit as shown in our current application guide. Any substitutions or exemptions of required components will immediately void the warranty. Some finish damage may happen to parts during shipping and is not covered under warranty.

This warranty is expressly in lieu of all other warranties expressed or implied. This warranty shall not apply to any product that has been improperly installed, modified or customized subject to accident, negligence, abuse or misuse.

ICON VEHICLE DYNAMICS®
PERFORMANCE SUSPENSION SYSTEMS AND SHOCK ABSORBERS

7929 Lincoln Ave. Riverside, CA 92504 Phone: 951.689.ICON Fax: 951.689.1016
www.iconvehicledynamics.com

FOLLOW US ON FACEBOOK!