TRAIL FORTRESS

BUILT FOR THE TRAIL. CHECKED FOR YOUR TRUCK.

BOLT 7022699 Installation Instructions

Toolbox Latch for Dodge and Jeep Key Family

Part number: 7022699

trailfortress.com/bolt-toolbox-latch-dodge-jeep-7022699

Scan for fitment, price and install help

BOLT®
BREAKTHROUGH ONE-KEY LOCK TECHNOLOGY

Tool Box Handle with BOLT Cylinder

FOR SPANISH AND FRENCH TRANSLATIONS GO TO:
HTTP://WWW.BOLTLOCK.COM/ABOUT-STRATTEC/BOLT-LITERATURE

ENCUENTRA INSTRUCCIONES DE ENSAMPLE EN ESPAÑOL EN EL WEBSITE:
HTTP://WWW.BOLTLOCK.COM/ABOUT-STRATTEC/BOLT-LITERATURE

POUR INSTRUCTIONS EN FRANÇAIS, VISITEZ
HTTP://WWW.BOLTLOCK.COM/ABOUT-STRATTEC/BOLT-LITERATURE

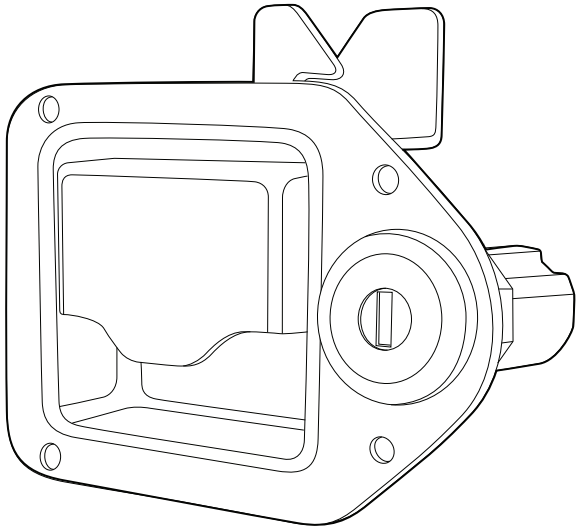

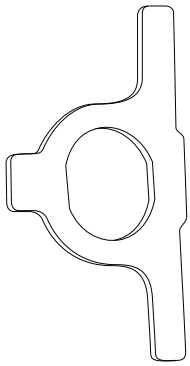

SPACER

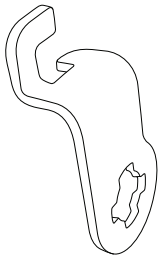

LEVER



E-CLIP

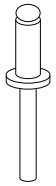

4x

RIVET

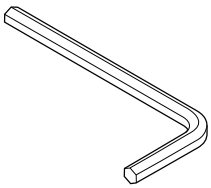

1/8" ALLEN WRENCH

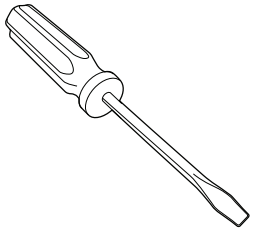

FLATHEAD SCREW DRIVER

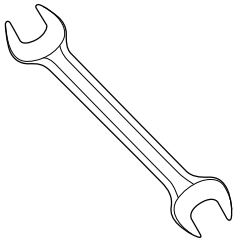

1 1/4" WRENCH

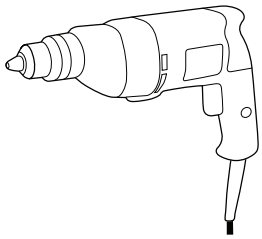

DRILL W/ 3/16" (RECOMMENDED) BIT

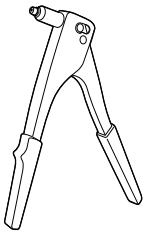

RIVET GUN

REMOVAL OF OLD HANDLE

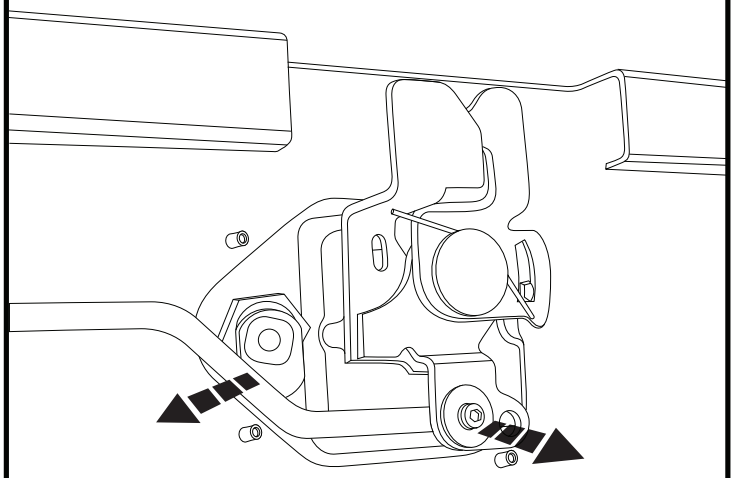

1 LOOSEN SET SCREWS AND REMOVE CONNECTING ROD WITH A 1/8" ALLEN WRENCH (THIS STEP MAY NOT APPLY TO ALL MODELS)

2 DRILL OUT EXISTING RIVETS (RECOMMENDED SIZE IS 3/16")
DO NOT EXCEED SIZE #16 DUE TO RISK OF DAMAGE TO TOOLBOX)

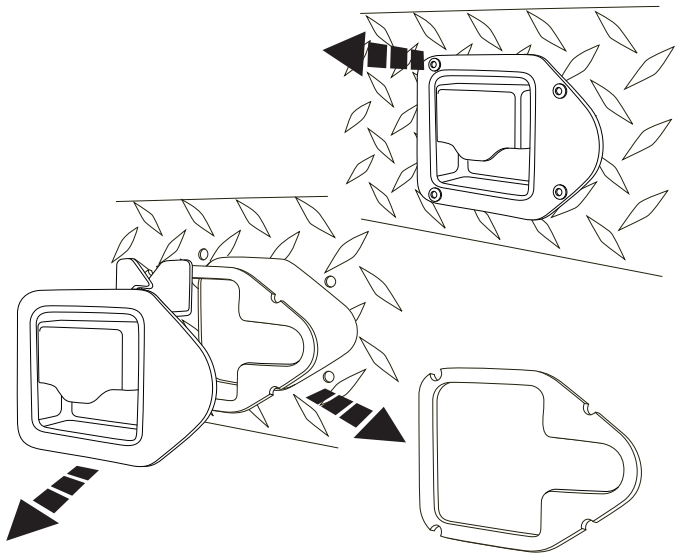

3 REMOVE EXISTING HANDLE/LATCH ASSEMBLY AND GASKET FROM TOOLBOX.
SAVE GASKET AS IT WILL BE RE-USED WITH NEW HANDLE.

CODING OF LOCK CYLINDER

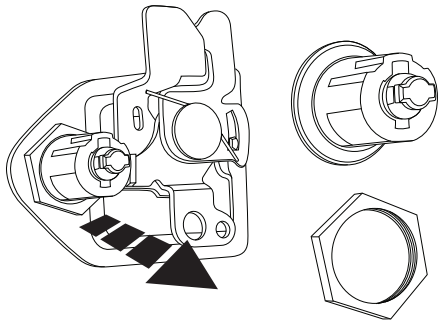

1 LOOSEN NUT & REMOVE LOCK CYLINDER FROM NEW HANDLE



2 READ WARNING LABEL AND REMOVE IT

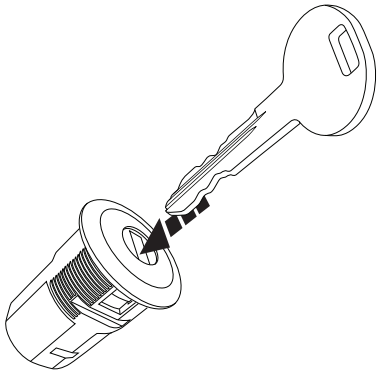

3 REMOVE IGNITION KEY FROM KEY CHAIN AND INSERT IT INTO LOCK CYLINDER

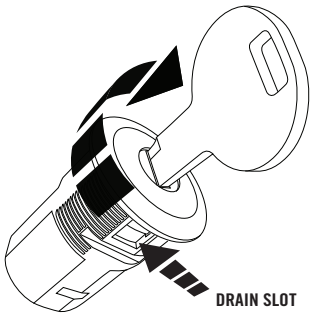

4 ORIENT LOCK CYLINDER SUCH THAT DRAIN SLOT IS DOWN, WHILE MAINTAINING FULL KEY INSERTION, TURN THE KEY 180º CLOCK-WISE. DO NOT PULL UP OR DOWN ON KEY WHILE CODING

5 KEY IS NOW IN LOCKED POSITION. ROTATE 90º CLOCKWISE TO UNLOCK.

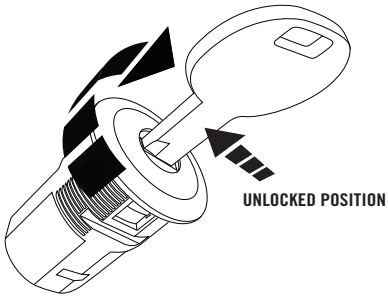

6 CYCLE LOCK 3X TO ENSURE LOCK CYLINDER WAS CODED PROPERLY LEAVE IN LOCKED POSITION WHEN READY TO INSTALL

INSTALLATION OF NEW HANDLE

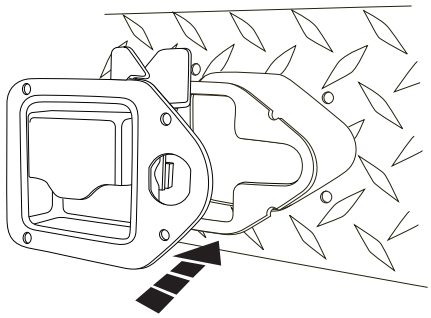

1 PLACE NEW HANDLE WITH GASKET FROM OLD ASSEMBLY INTO HOLE (LOCK CYLINDER & NUT HAVE BEEN REMOVED)

2 ALIGN ALL FOUR HOLES PRIOR TO RIVETING FOR PROPER INSTALLMENT.

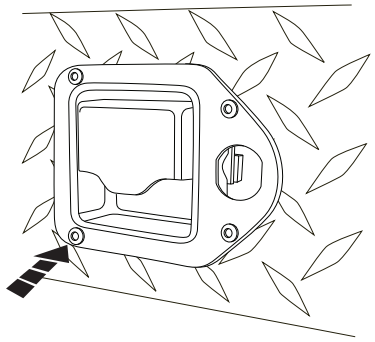

3 RIVET HANDLE INTO PLACE (4X WITH INCLUDED RIVETS)

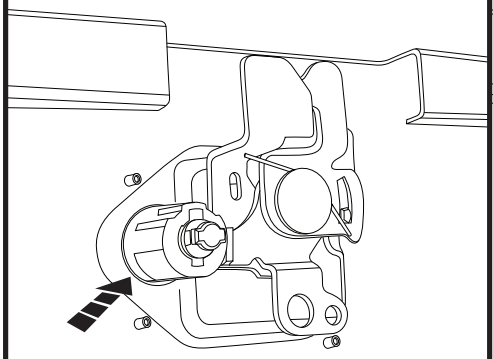

4 INSTALL CODED LOCK CYLINDER INTO HANDLE (ORIENT LOCK CYLINDER SUCH THAT DRAIN SLOT IS DOWN) LEAVE LOCK CYLINDER IN THE LOCKED POSITION

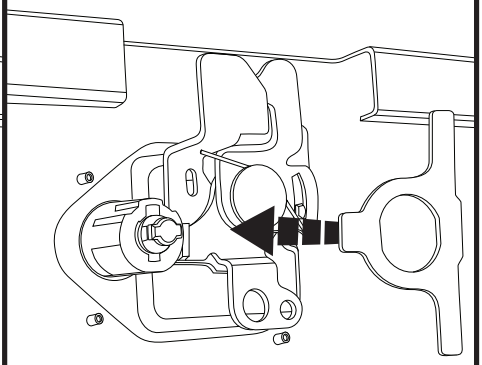

5 ASSEMBLE SPACER FROM THE BACK ONTO LOCK CYLINDER

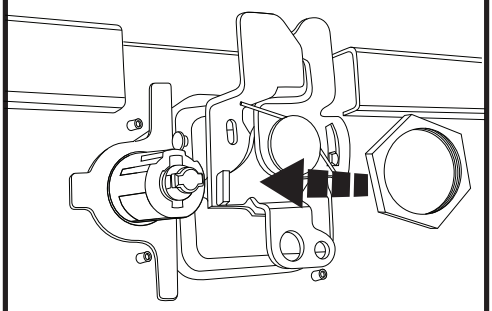

6 ASSEMBLE NUT AND TIGHTEN (RECOMMENDED TORQUE IS 8-10NM)

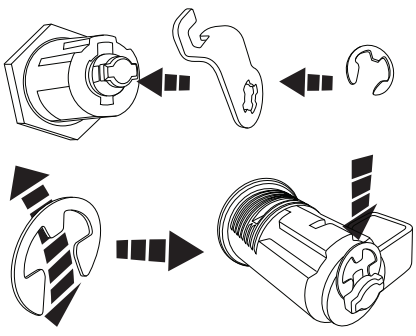

E-CLIP IS FORMED WITH A BOW

ASSEMBLE WITH CONCAVE SIDE AGAINST THE LEVER AS SHOWN

7 PLACE LEVER ON TAIL OF LOCK AND USE E-CLIP TO SECURE USE FLAT HEAD SCREWDRIVER TO HELP FULLY SEAT CLIP

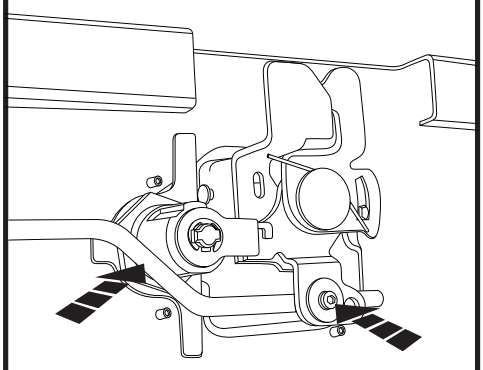

8 MOVE CONNECTING ROD BACK INTO PLACE AND SECURE BY TIGHTENING SET SCREWS WITH A 1/8" ALLEN WRENCH (THIS STEP MAY NOT APPLY TO ALL MODELS)