Baja Designs 80-0014 Installation Instructions

80-0014

Part number: 80-0014

trailfortress.com/baja-designs-reflex-light-actuator-kit-s8-light-bar-80-0014

Scan for fitment, price and install help

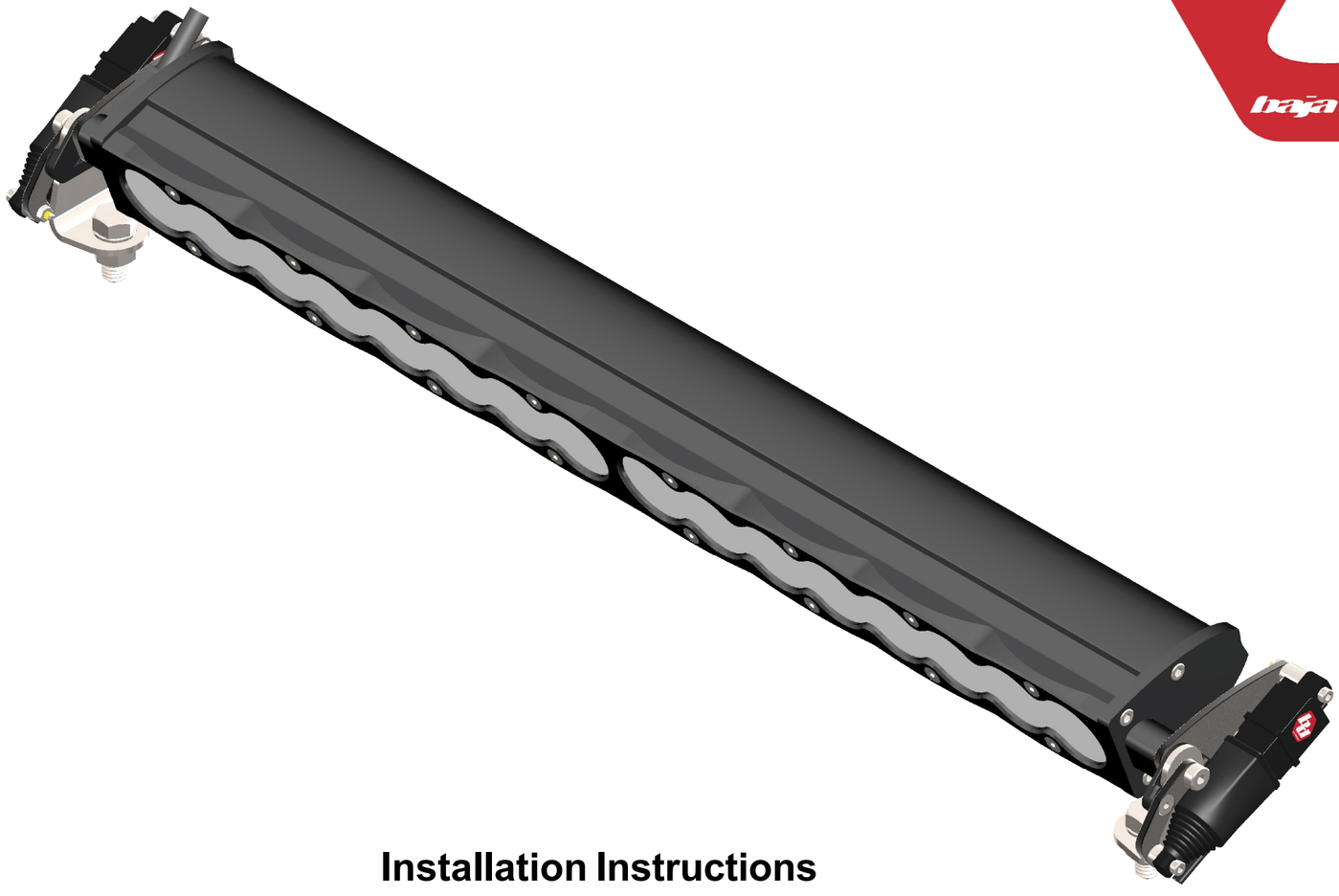

Installation Instructions

S8 Double

20"+ Length

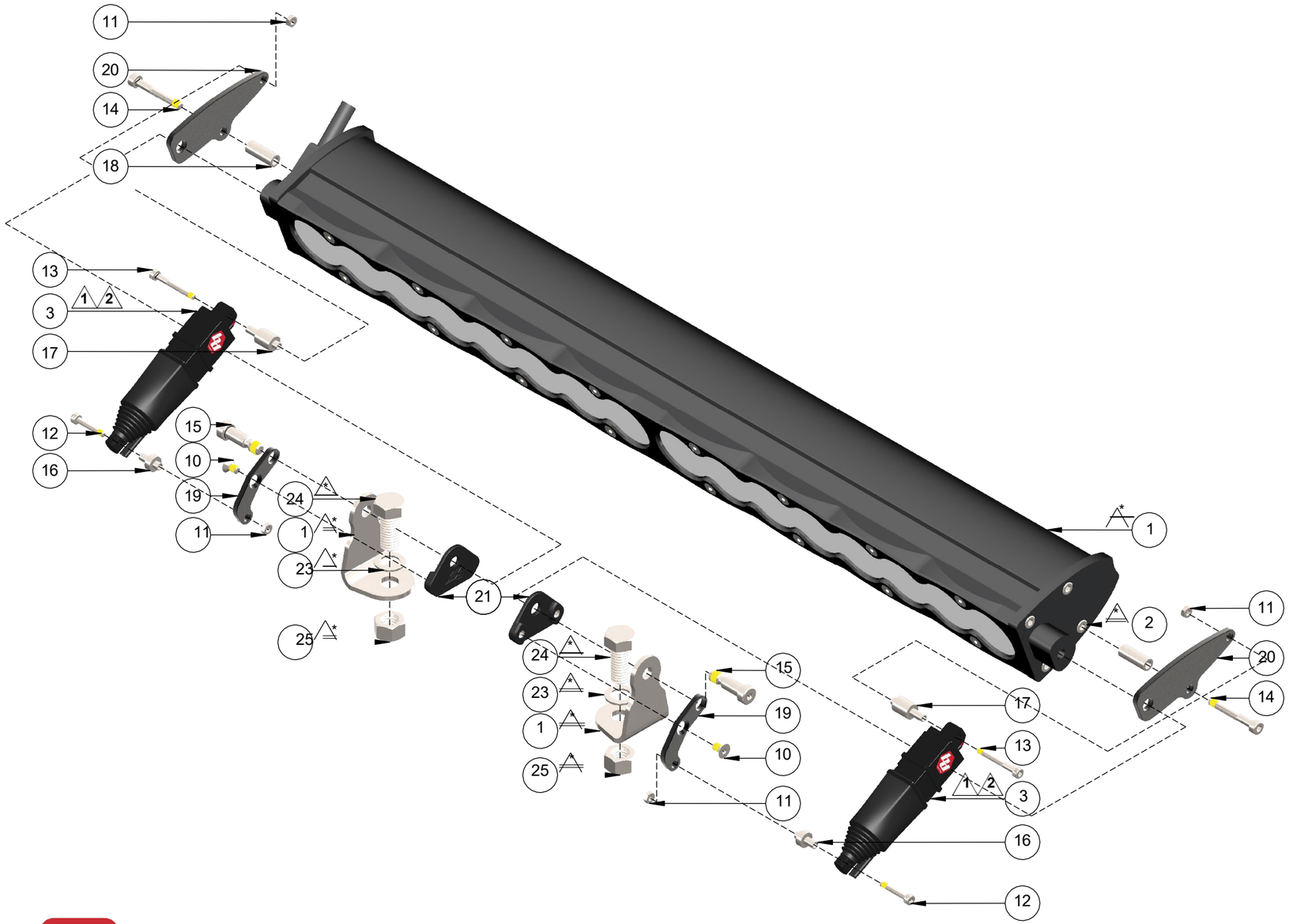

BILL OF MATERIALS
S8 Double
20"+ Length

	ITEM NO.	DESCRIPTION	QTY.
STEP 1	1	S8 Bracket *	2
	2	3/8"-16 X 7/8" Hex Head Screw *	2
	3	3/8" Washer *	2
STEP 2	4	Thrust Insert, S8	2
	5	Mount Plate, S8	2
	6	M4 X 7mm Flat Head Cap Screw	2
STEP 3	7	M4 X 10mm Socket Head Cap Screw *	2
STEP 4	8	S8 Housing *	1
	9	M4 Screw Spacer	2
	10	Pivot Plate, S8	2
	11	M4 X 30mm Socket Head Cap Screw	2
STEP 5	12	Ø1/4" X .480" Shoulder Screw	2
STEP 6	13	12V Actuator	2
	14	M3 X 18mm Socket Head Cap Screw	2
	15	M3 X 26mm Socket Head Cap Screw	2
	16	M3 Nut	4
	17	M3 Screw Spacer, Shoulder Type 1, 3mm L	2
	18	M3 Screw Spacer, Shoulder Type 2, 10mm L	2
STEP 7	19	3/8"-16 Nut *	2

NOTES:

1. Actuator cannot be moved manually.
   Forcing the actuator up or down will damage the actuator and void the limited lifetime warranty
2. Actuators can be synced when used in multiples.
   Move actuator fully down or fully up to home and resync.

* This item not included in kit.

TOOLS NEEDED

- 2.5mm HEX WRENCH
- 3mm HEX WRENCH
- 5.5mm WRENCH
- 9/16" WRENCH (2X)

trailfortress.com/baja-designs-reflex-light-actuator-kit-s8-light-bar-80-0014

	ITEM NO.	DESCRIPTION	QTY.
STEP **1**	1	S8 Bracket	2
	2	3/8"-16 X 7/8" Hex Head Screw	2
	3	3/8" Washer	2

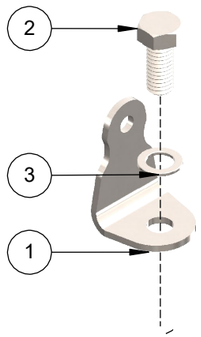

Step 1

Install bolts to brackets

ITEMS: 1 2 3

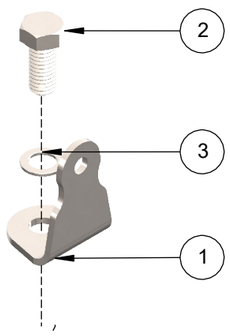

	ITEM NO.	DESCRIPTION	QTY.
STEP **2**	4	Thrust Insert, S8	2
	5	Mount Plate, S8	2
	6	M4 X 7mm Flat Head Cap Screw	2

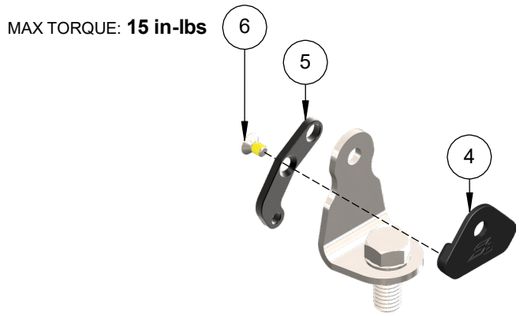

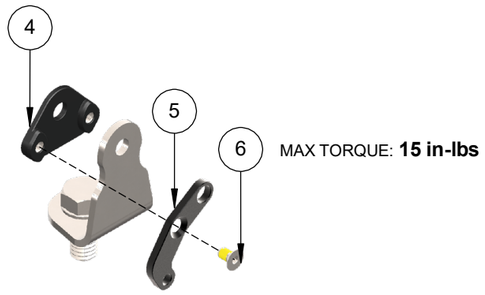

Step 2

Install thrust inserts + mount plates to brackets

ITEMS: 4 5 6

TOOLS NEEDED: • 2.5mm HEX WRENCH

	ITEM NO.	DESCRIPTION	QTY.
STEP 3	7	M4 X 10mm Socket Head Cap Screw	2

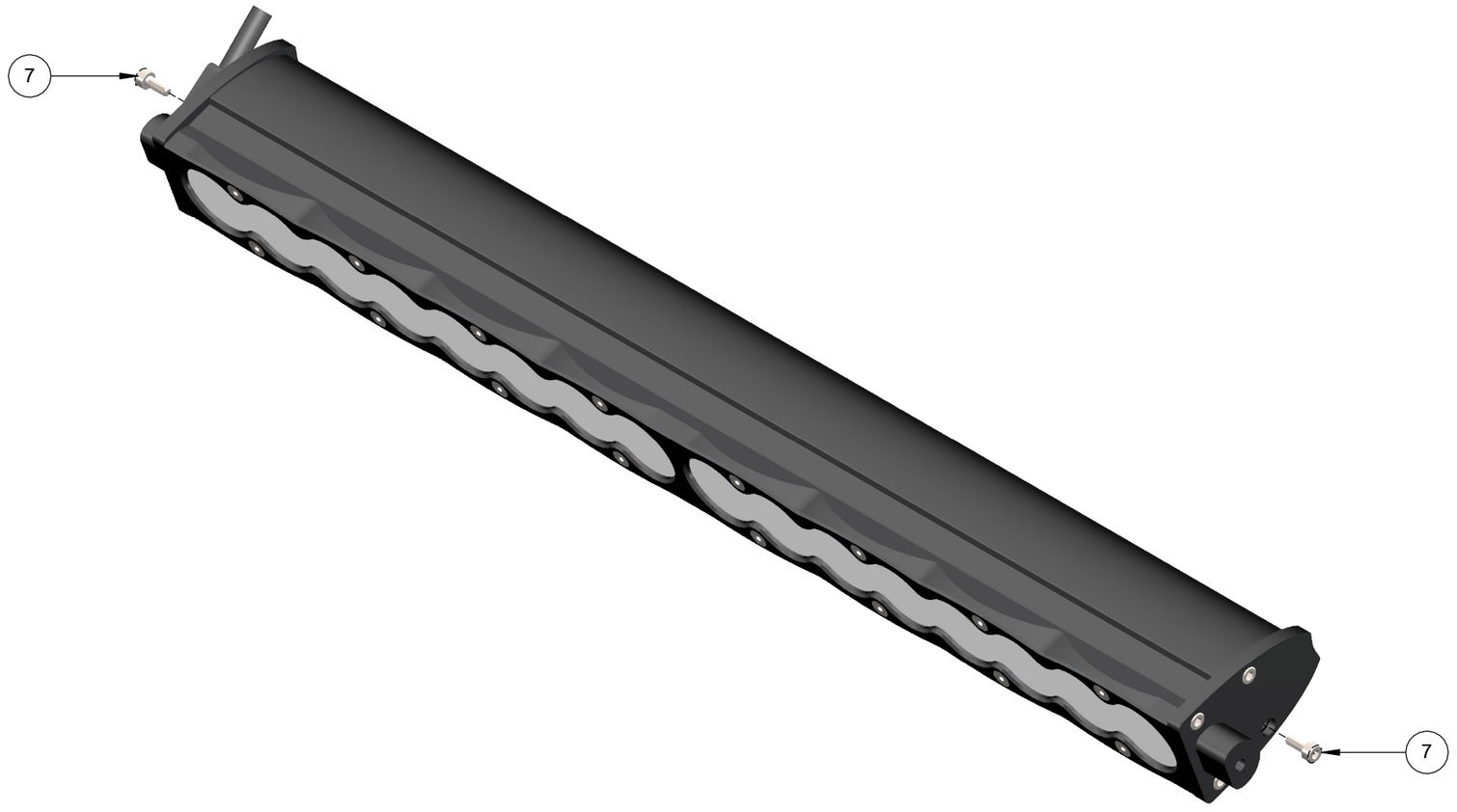

Step 3

Remove lower rear screws from housing

ITEMS: 7

TOOLS NEEDED: • 3mm HEX WRENCH

	ITEM NO.	DESCRIPTION	QTY.
STEP **4**	8	S8 Housing	1
	9	M4 Screw Spacer	2
	10	Pivot Plate, S8	2
	11	M4 X 30mm Socket Head Cap Screw	2

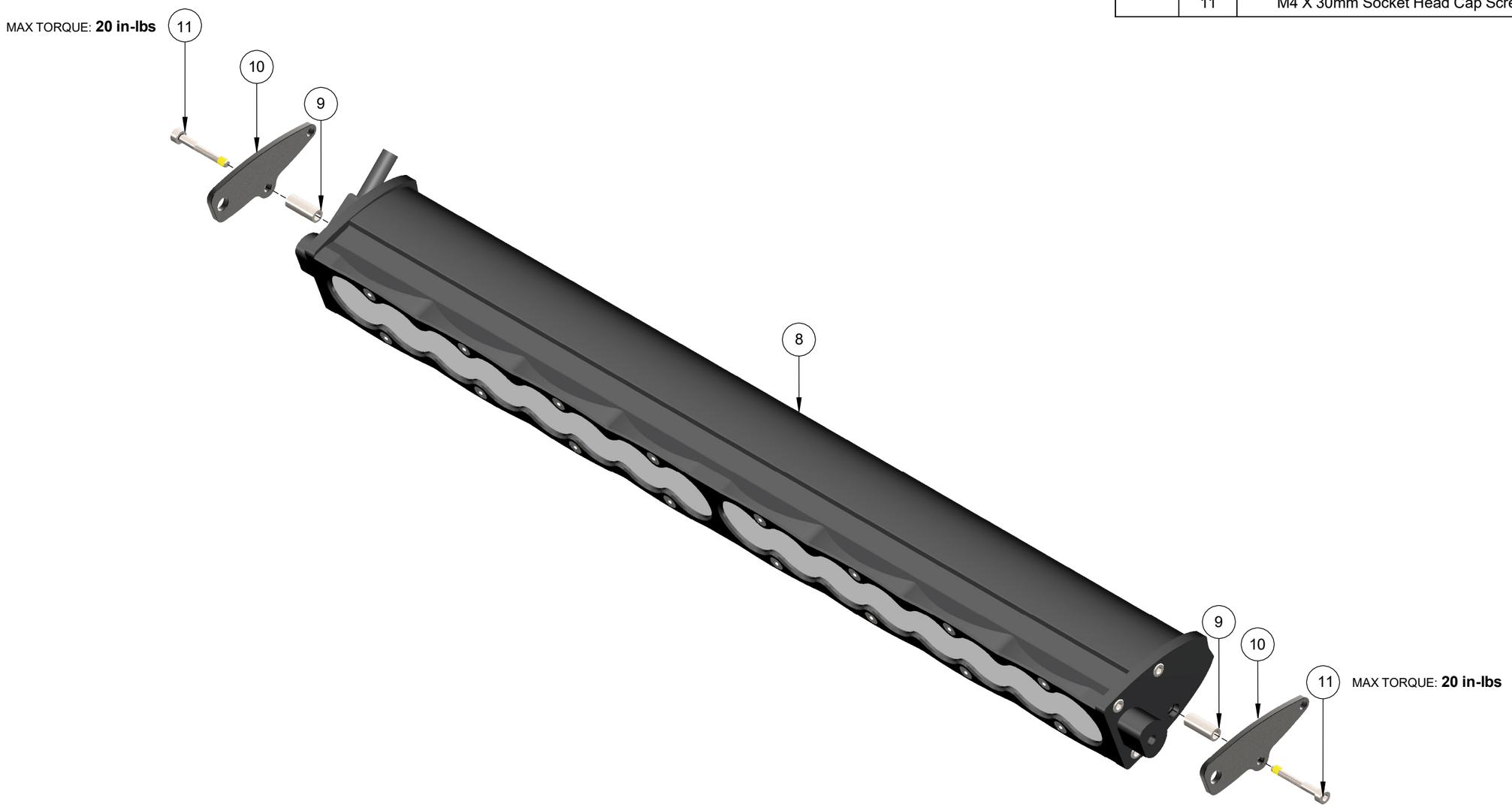

Step 4

Install pivot plates to housing

ITEMS: 8 9 10 11

TOOLS NEEDED: • 3mm HEX WRENCH

	ITEM NO.	DESCRIPTION	QTY.
STEP **5**	12	Ø1/4" X .480" Shoulder Screw	2

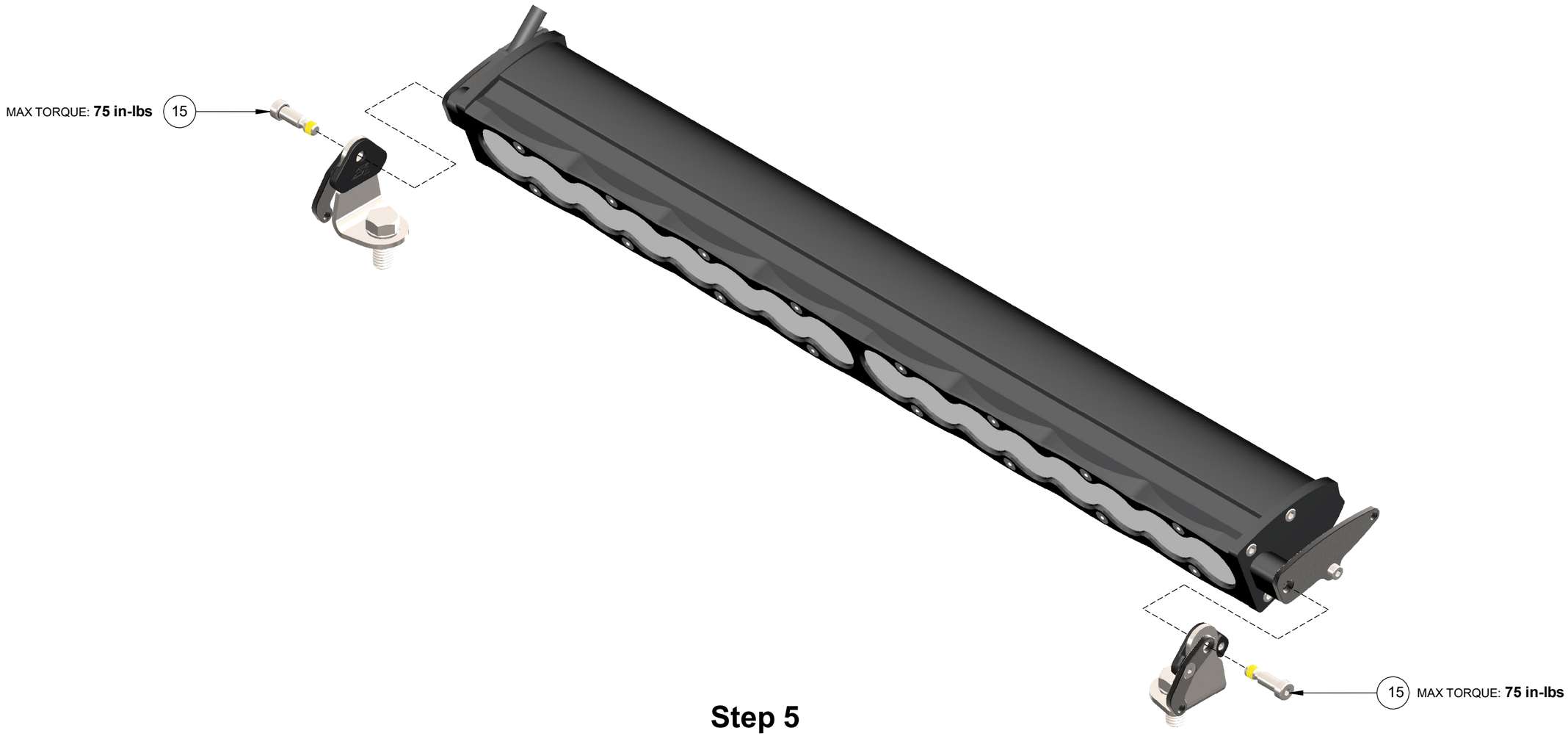

Step 5

Install shoulder screws through brackets to housing

ITEMS: 15

TOOLS NEEDED:
- 3mm HEX WRENCH

	ITEM NO.	DESCRIPTION	QTY.
STEP **6**	13	12V Actuator	2
	14	M3 X 18mm Socket Head Cap Screw	2
	15	M3 X 26mm Socket Head Cap Screw	2
	16	M3 Nut	4
	17	M3 Screw Spacer, Shoulder Type 1, 3mm L	2
	18	M3 Screw Spacer, Shoulder Type 2, 10mm L	2

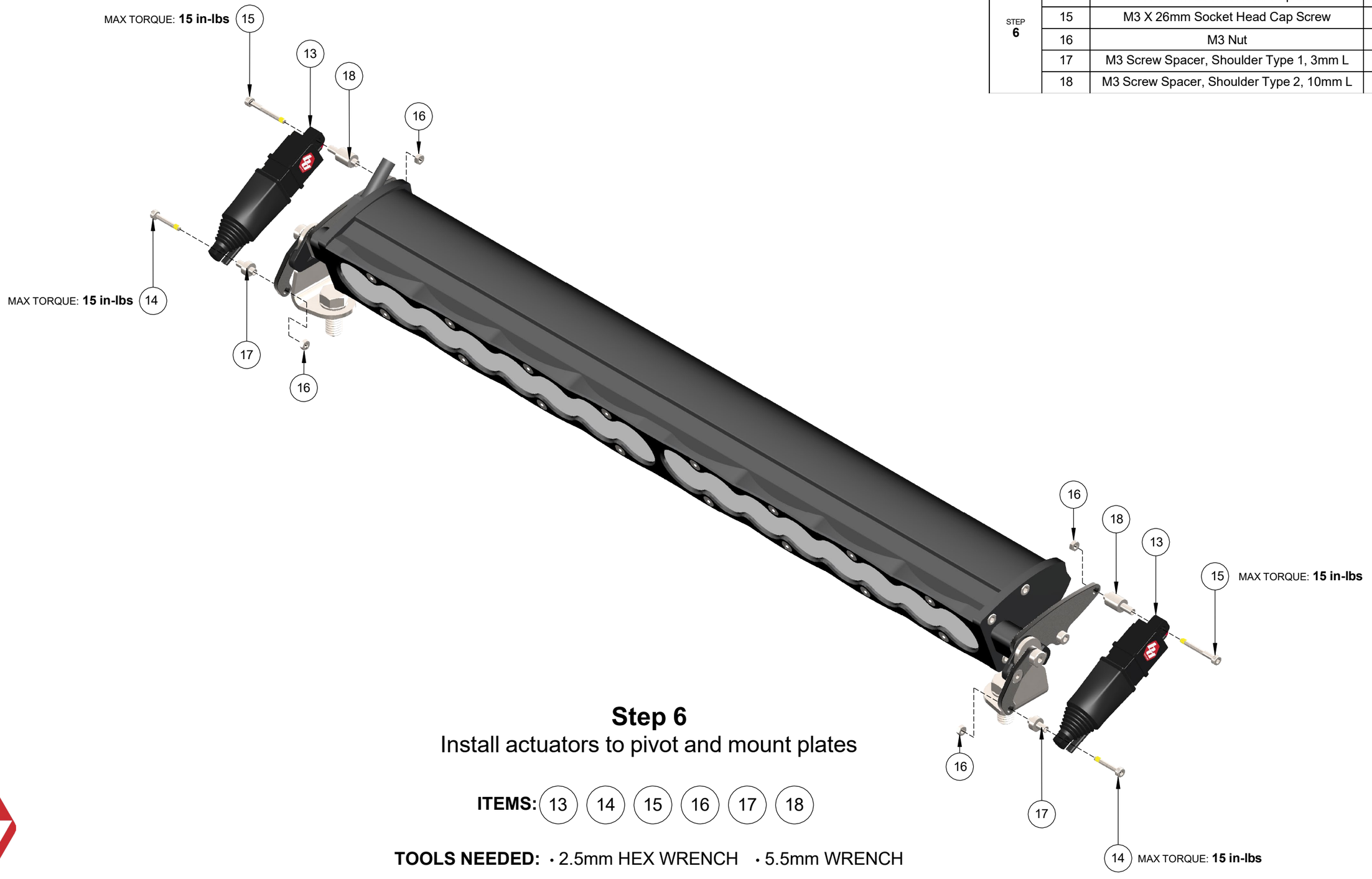

Step 6

Install actuators to pivot and mount plates

ITEMS: 13 14 15 16 17 18

TOOLS NEEDED: • 2.5mm HEX WRENCH • 5.5mm WRENCH

	ITEM NO.	DESCRIPTION	QTY.
STEP 7	19	3/8"-16 Nut	2

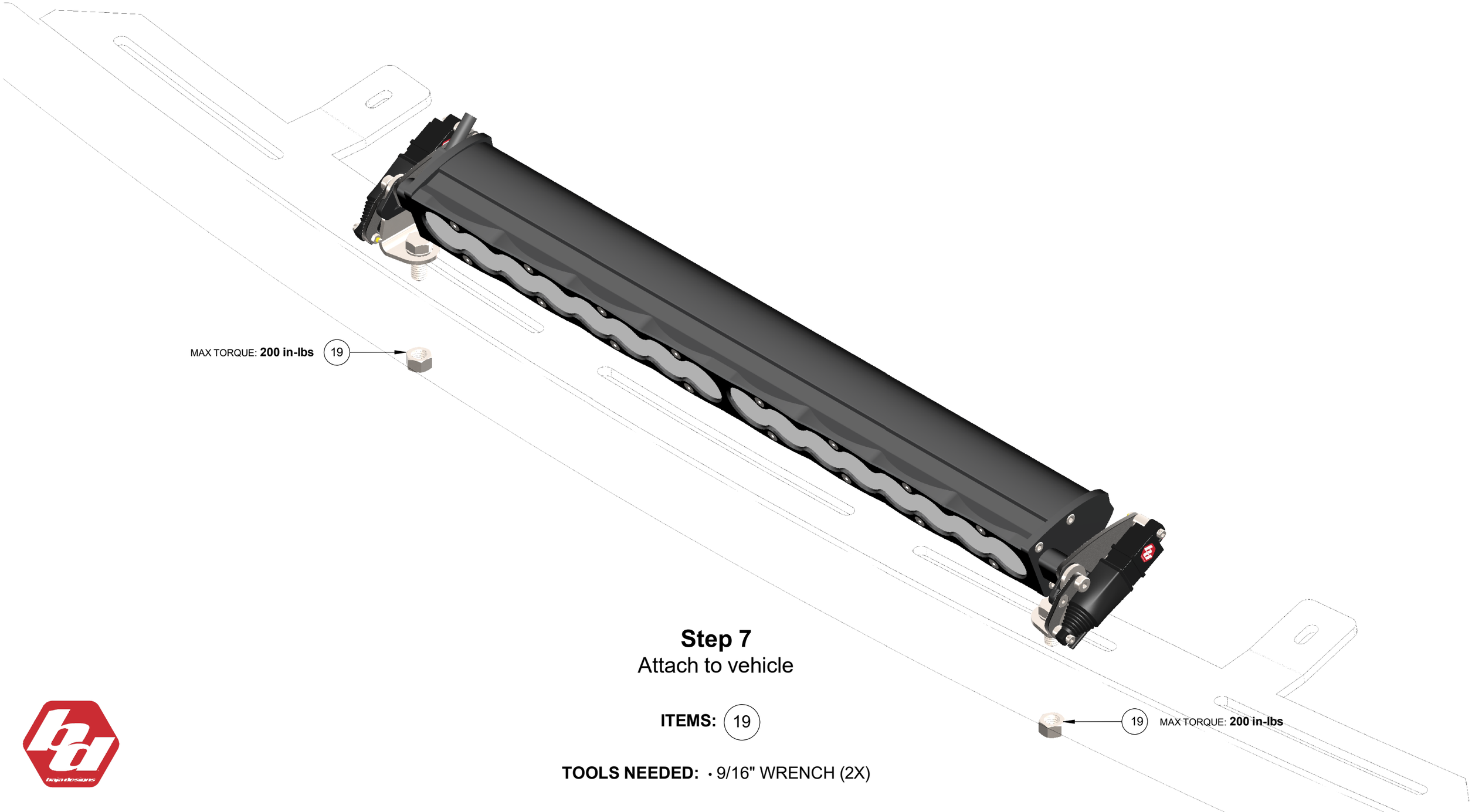

Step 7

Attach to vehicle

ITEMS: 19

TOOLS NEEDED: • 9/16" WRENCH (2X)



End
Installation Complete