Baja Designs 80-0013 Installation Instructions

80-0013

Part number: 80-0013

trailfortress.com/baja-designs-reflex-light-actuator-kit-s8-light-bar-80-0013

Scan for fitment, price and install help

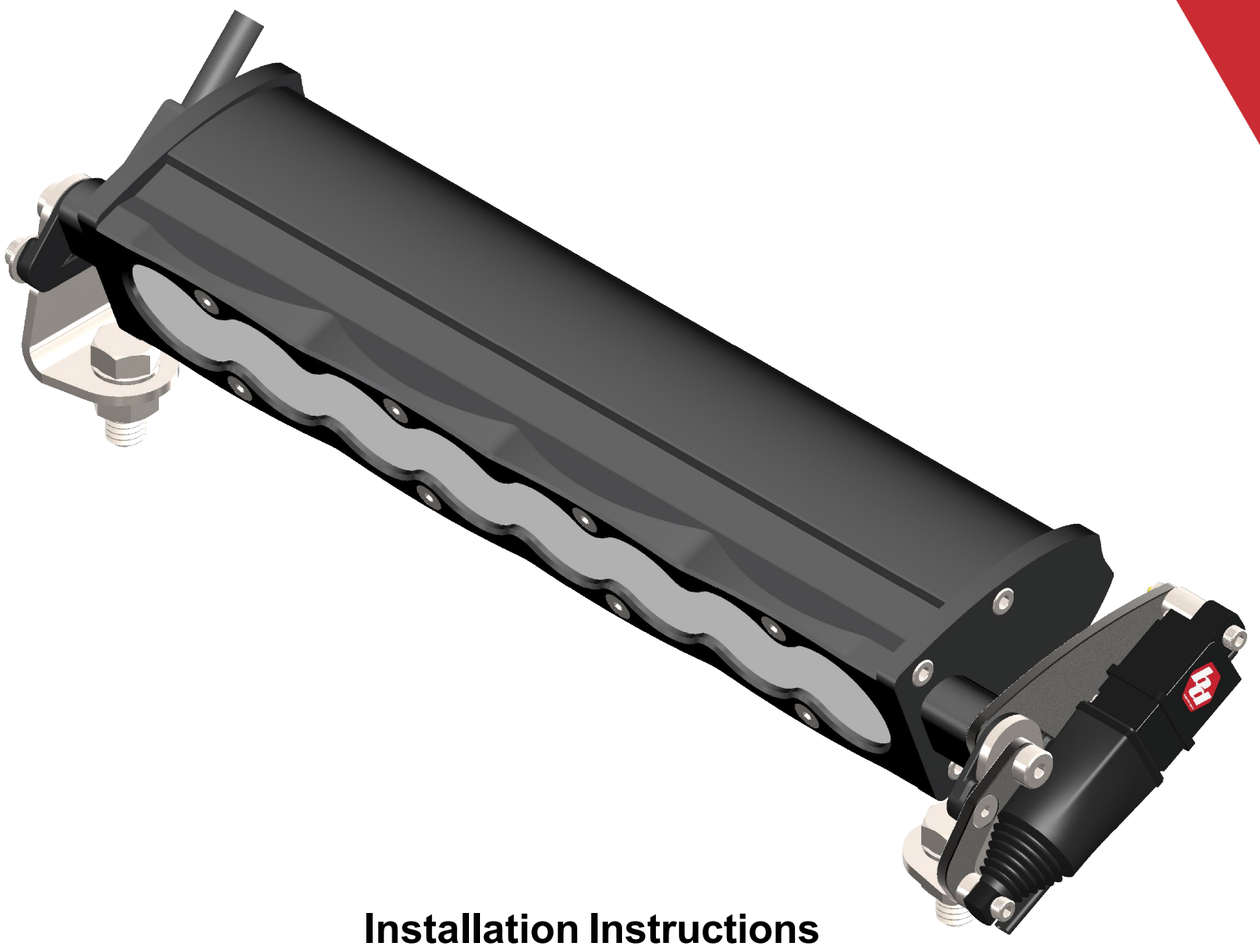

Installation Instructions

S8 Single

10" Length

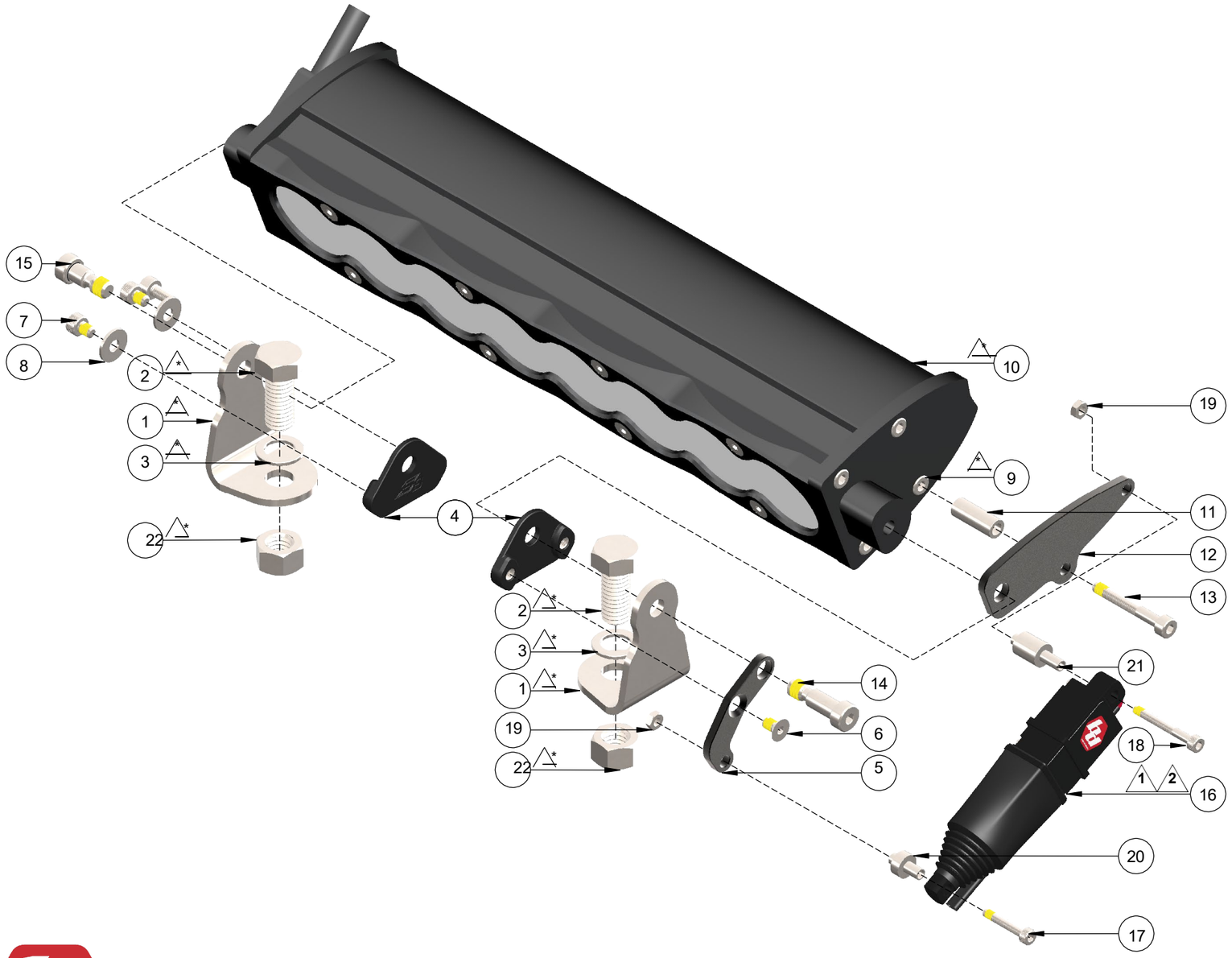

BILL OF MATERIALS
S8 Single
10" Length

	ITEM NO.	DESCRIPTION	QTY.
STEP 1	1	S8 Bracket *	2
	2	3/8"-16 X 7/8" Hex Head Screw *	2
	3	3/8" Washer *	2
STEP 2	4	Thrust Insert, S8	2
	5	Mount Plate, S8	1
	6	M4 X 7mm Flat Head Cap Screw	1
	7	M4 X 5mm Socket Head Cap Screw	2
	8	M4 Oversized Washer	2
STEP 3	9	M4 X 10mm Socket Head Cap Screw *	1
STEP 4	10	S8 Housing *	1
	11	M4 Screw Spacer	1
	12	Pivot Plate, S8	1
	13	M4 X 30mm Socket Head Cap Screw	1
STEP 5	14	Ø1/4" X .480" Shoulder Screw	1
	15	Ø1/4" X .240" Shoulder Screw	1
STEP 6	16	12V Actuator	1
	17	M3 X 18mm Socket Head Cap Screw	1
	18	M3 X 26mm Socket Head Cap Screw	1
	19	M3 Nut	2
	20	M3 Screw Spacer, Shoulder Type 1, 3mm L	1
	21	M3 Screw Spacer, Shoulder Type 2, 10mm L	1
STEP 7	22	3/8"-16 Nut *	2

NOTES:

1. Actuator cannot be moved manually.
   Forcing the actuator up or down will damage the actuator and void the limited lifetime warranty
2. Actuators can be synced when used in multiples.
   Move actuator fully down or fully up to home and resync.

* This item not included in kit.

TOOLS NEEDED

- 2.5mm HEX WRENCH
- 3mm HEX WRENCH
- 5.5mm WRENCH
- 9/16" WRENCH (2X)

	ITEM NO.	DESCRIPTION	QTY.
STEP 1	1	S8 Bracket	2
	2	3/8"-16 X 7/8" Hex Head Screw	2
	3	3/8" Washer	2

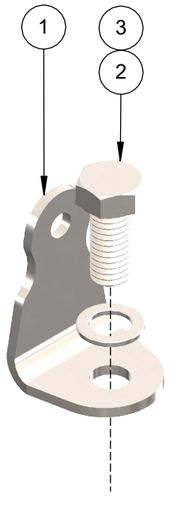

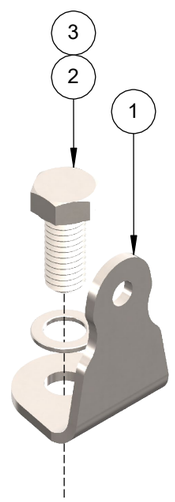

Step 1

Install bolts to brackets

ITEMS: 1 2 3

	ITEM NO.	DESCRIPTION	QTY.
STEP **2**	4	Thrust Insert, S8	2
	5	Mount Plate, S8	1
	6	M4 X 7mm Flat Head Cap Screw	1
	7	M4 X 5mm Socket Head Cap Screw	2
	8	M4 Oversized Washer	2

MAX TORQUE: **15 in-lbs**

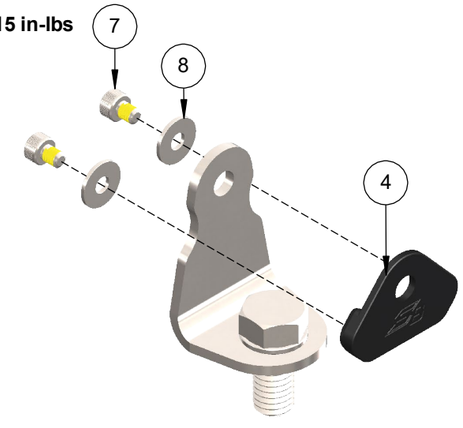

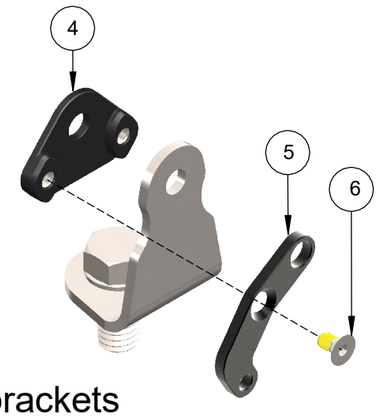

MAX TORQUE: **15 in-lbs**

Step 2

Install thrust inserts + mount plate to brackets

ITEMS: 4 5 6 7 8

TOOLS NEEDED: • 2.5mm HEX WRENCH • 3mm HEX WRENCH

For left side actuator installation.
Install opposite side for right side actuator installation

	ITEM NO.	DESCRIPTION	QTY.
STEP 3	9	M4 X 10mm Socket Head Cap Screw	1

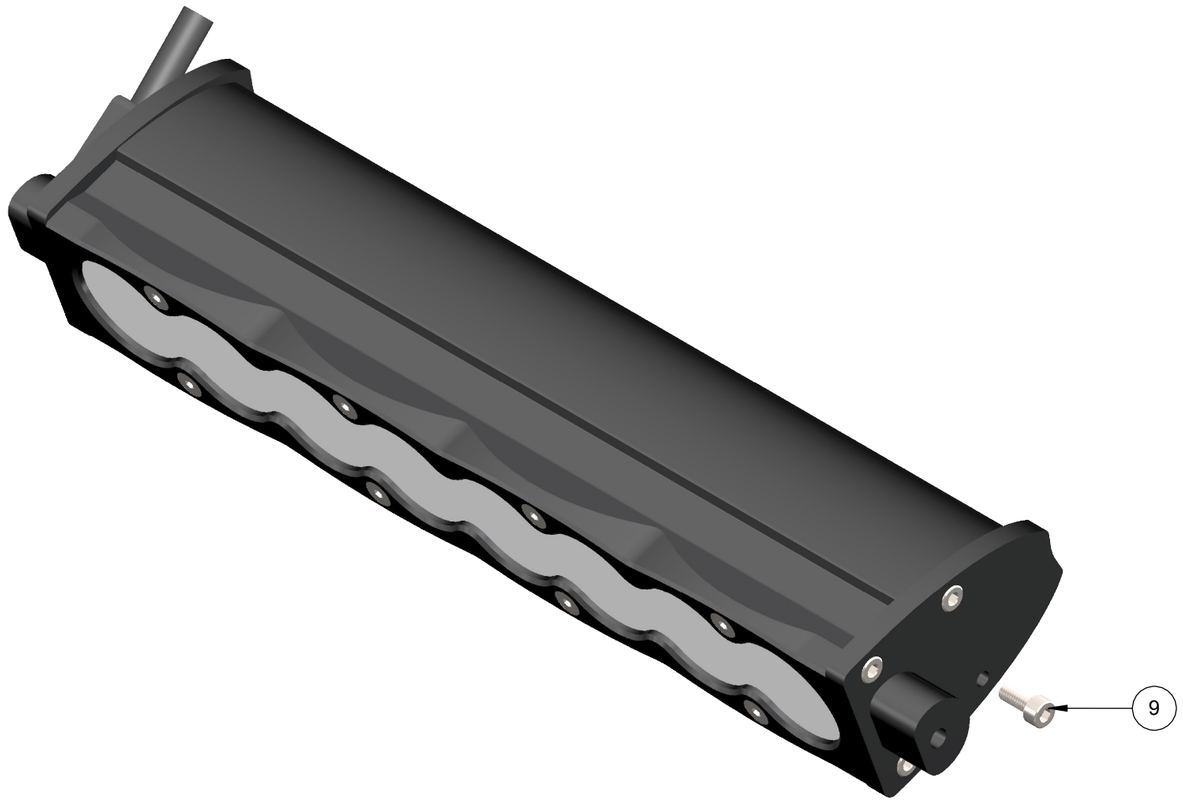

Step 3

Remove lower rear screw from housing

ITEMS: 9

TOOLS NEEDED: • 3mm HEX WRENCH

For left side actuator installation.
Install opposite side for right side actuator installation

	ITEM NO.	DESCRIPTION	QTY.
STEP **4**	10	S8 Housing	1
	11	M4 Screw Spacer	1
	12	Pivot Plate, S8	1
	13	M4 X 30mm Socket Head Cap Screw	1

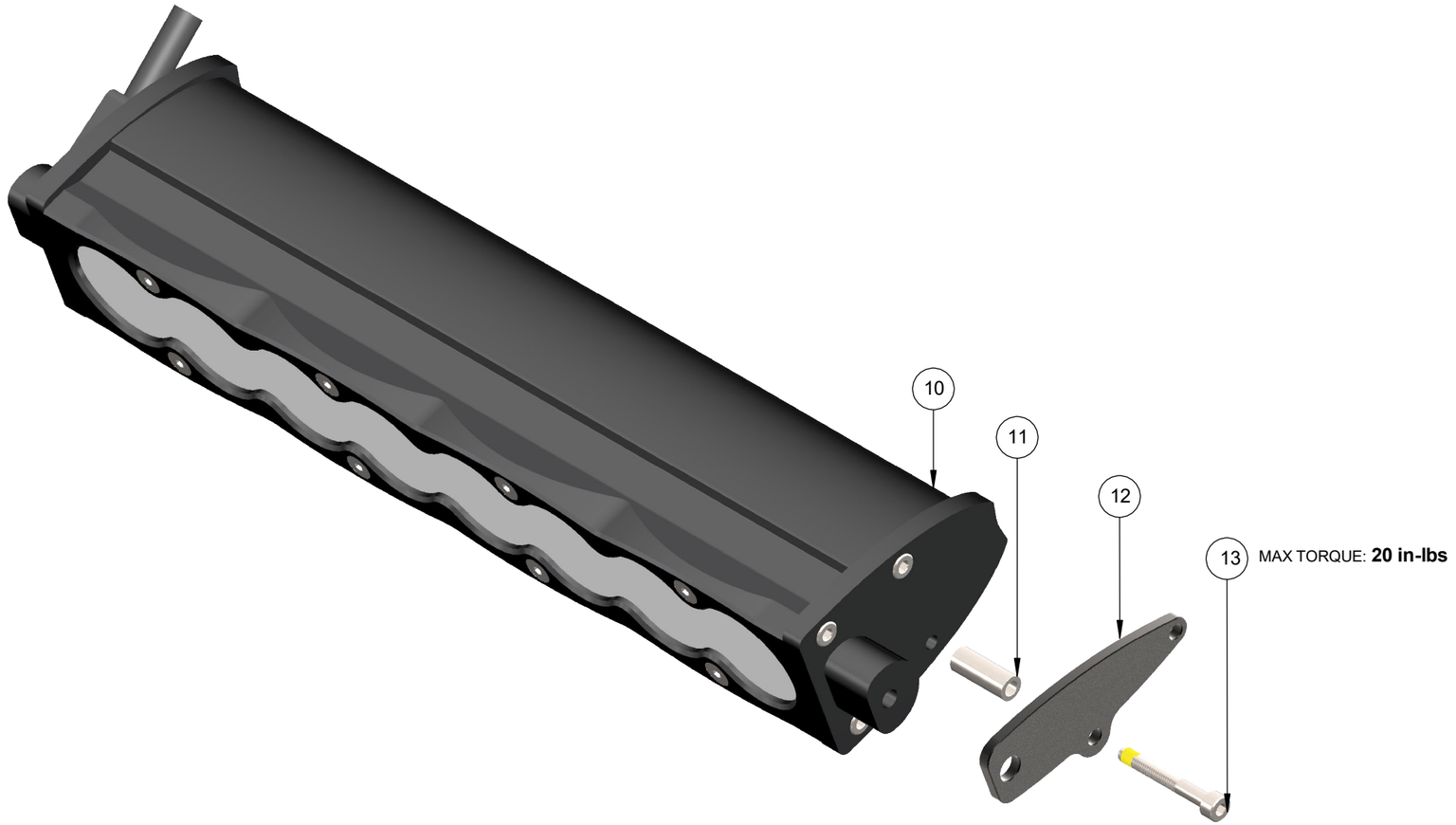

Step 4

Install pivot plate to housing

ITEMS: 10 11 12 13

TOOLS NEEDED: • 3mm HEX WRENCH

For left side actuator installation.
Install opposite side for right side actuator installation

	ITEM NO.	DESCRIPTION	QTY.
STEP **5**	14	Ø1/4" X .480" Shoulder Screw	1
	15	Ø1/4" X .240" Shoulder Screw	1

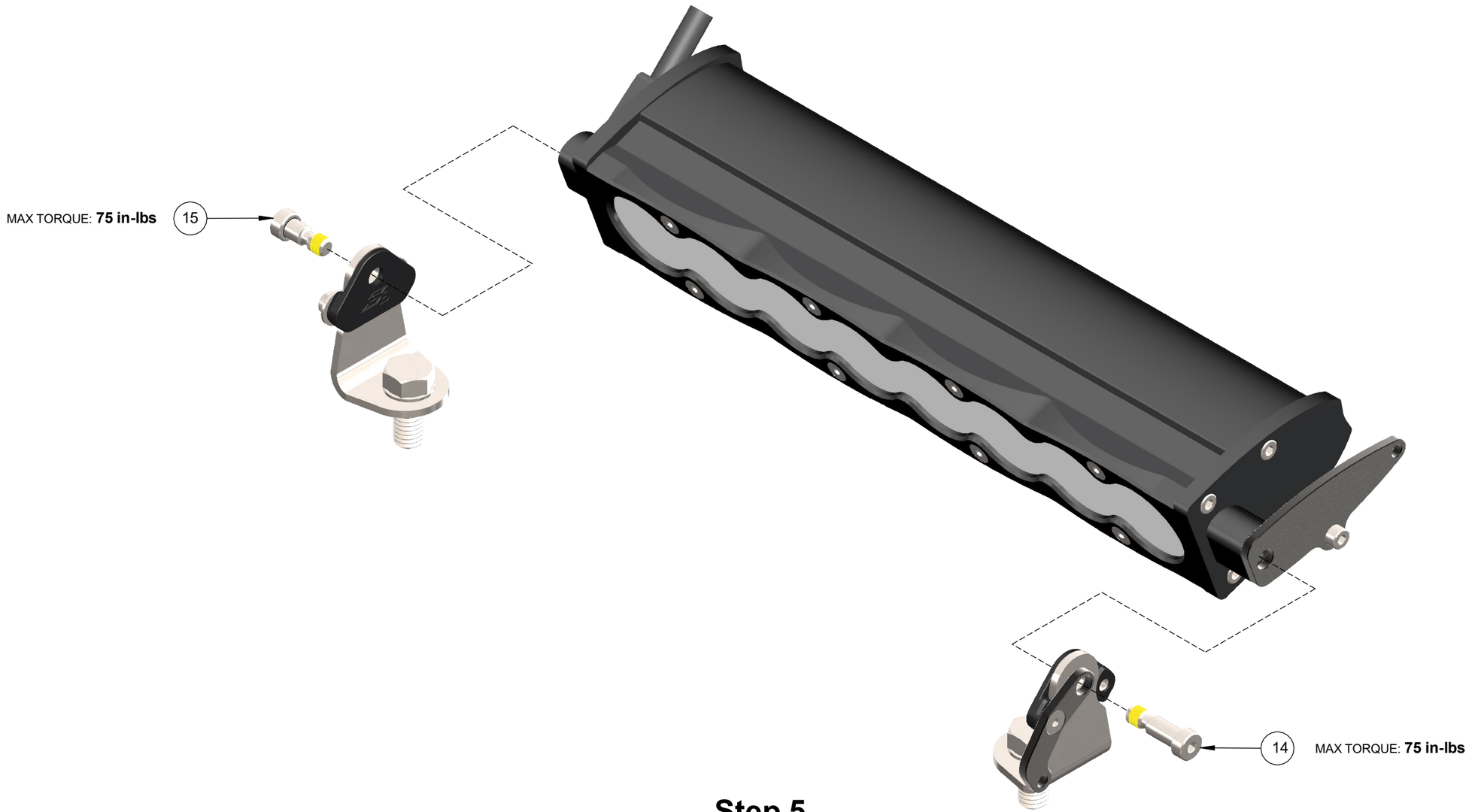

Step 5

Install shoulder screws through brackets to housing

ITEMS: 14 15

TOOLS NEEDED: • 3mm HEX WRENCH

For left side actuator installation.
Install opposite side for right side actuator installation

	ITEM NO.	DESCRIPTION	QTY.
STEP **6**	16	12V Actuator	1
	17	M3 X 18mm Socket Head Cap Screw	1
	18	M3 X 26mm Socket Head Cap Screw	1
	19	M3 Nut	2
	20	M3 Screw Spacer, Shoulder Type 1, 3mm L	1
	21	M3 Screw Spacer, Shoulder Type 2, 10mm L	1

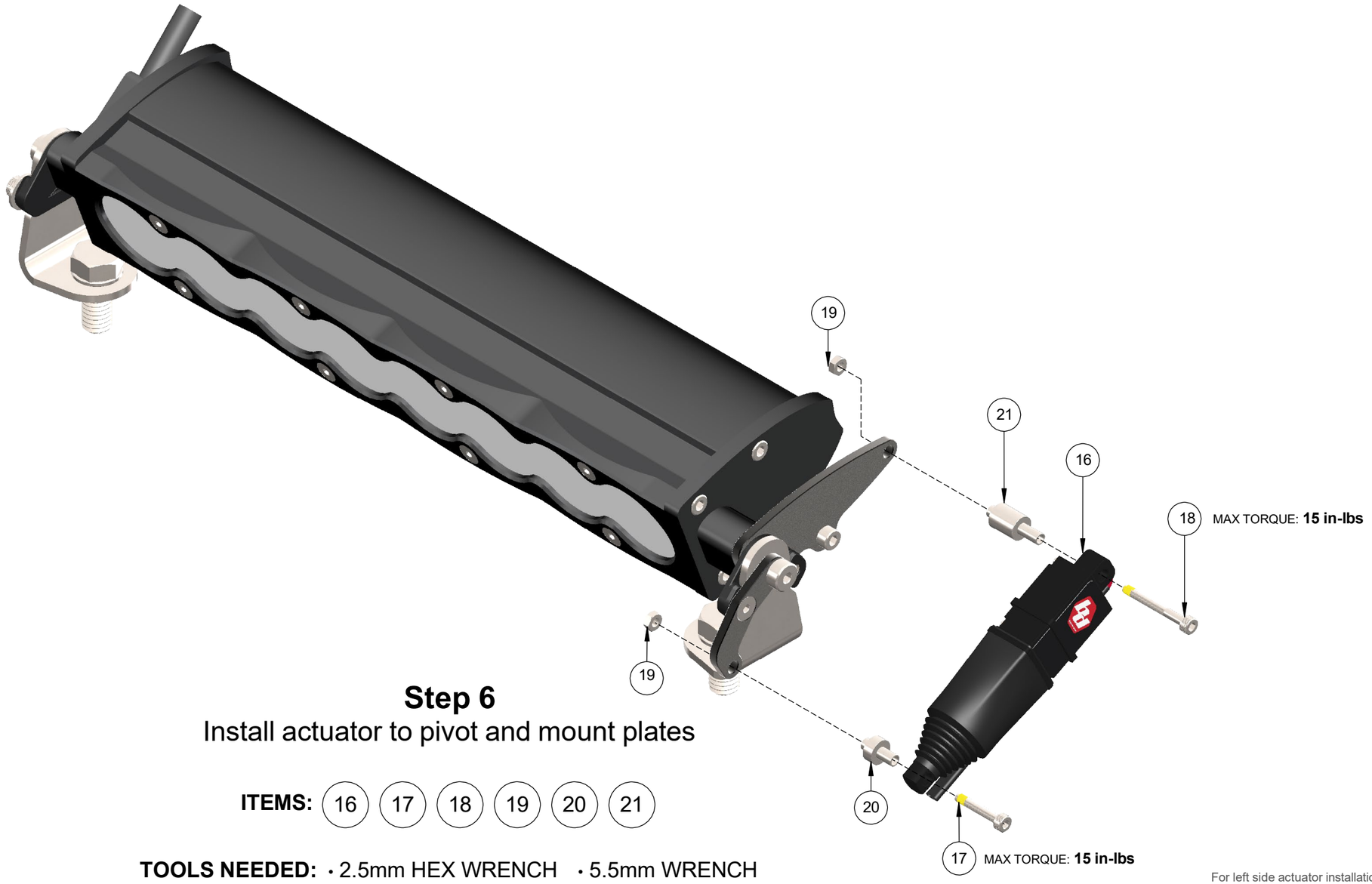

Step 6

Install actuator to pivot and mount plates

ITEMS: 16 17 18 19 20 21

TOOLS NEEDED: • 2.5mm HEX WRENCH • 5.5mm WRENCH

For left side actuator installation.
Install opposite side for right side actuator installation

	ITEM NO.	DESCRIPTION	QTY.
STEP 7	22	3/8"-16 Nut	2

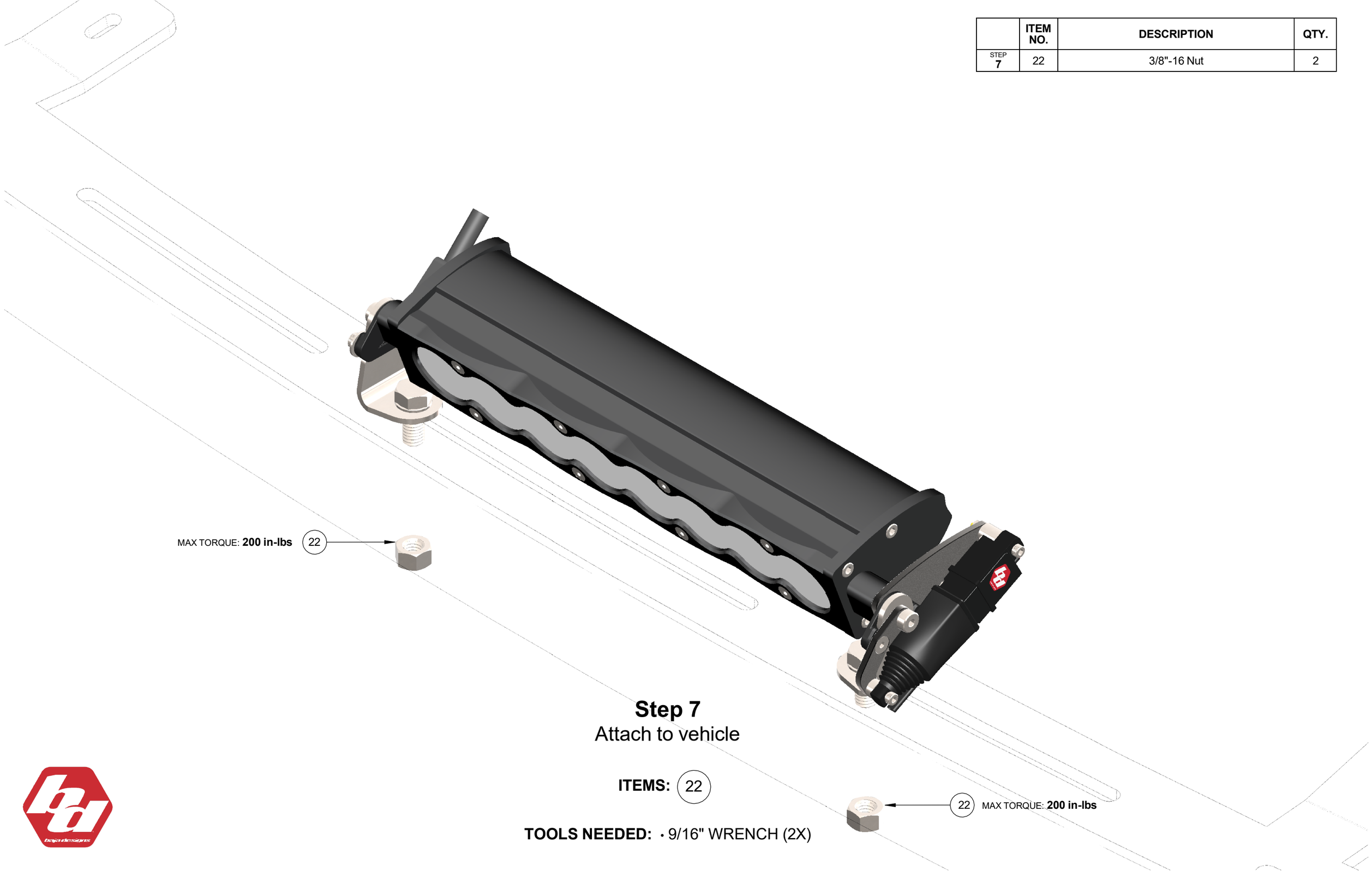

Step 7

Attach to vehicle

ITEMS: 22

TOOLS NEEDED: • 9/16" WRENCH (2X)



End
Installation Complete