Baja Designs 80-0012 Installation Instructions

Reflex Light Actuator Kit for OnX6+ Light Bar

Part number: 80-0012

trailfortress.com/baja-designs-reflex-light-actuator-kit-onx6-light-bar-80-0012

Scan for fitment, price and install help



Installation Instructions

ONX6+ Double

20"+ Length

NOTES:

1. Actuator cannot be moved manually.
   Forcing the actuator up or down will damage the actuator and void the limited lifetime warranty
2. Actuators can be synced when used in multiples.
   Move actuator fully down or fully up to home and resync.

* This item not included in kit.

TOOLS NEEDED

- 2.5mm HEX WRENCH
- 3mm HEX WRENCH
- 5.5mm WRENCH
- 9/16" WRENCH (2X)

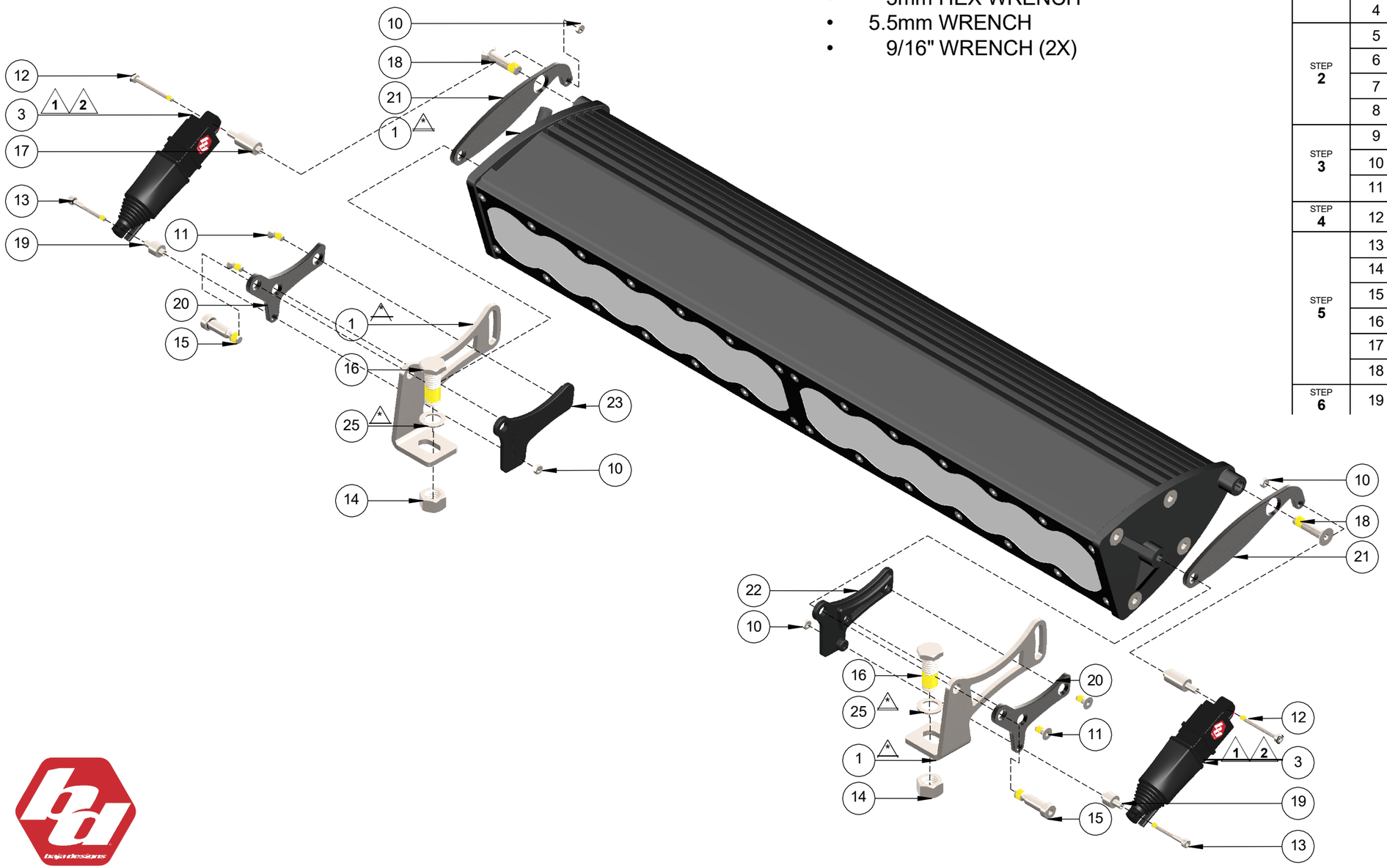

BILL OF MATERIALS
ONX6+ Double
20"+ Length

	ITEM NO.	DESCRIPTION	QTY.
STEP 1	1	ONX6+ Bracket, Right *	1
	2	ONX6+ Bracket, Left *	1
	3	3/8"-16 X 1" Hex Low Head Screw	2
	4	3/8" Washer *	2
STEP 2	5	Thrust Insert, ONX6+, Left	1
	6	Thrust Insert, ONX6+, Right	1
	7	Mount Plate, ONX6+	2
	8	M4 X 9mm Flat Head Cap Screw	4
STEP 3	9	ONX6+ Housing *	1
	10	Pivot Plate, ONX6+	2
	11	1/4"-20 X 1" Flat Head Cap Screw, Undercut	2
STEP 4	12	Ø1/4" X .560" Shoulder Screw	2
STEP 5	13	12V Actuator	2
	14	M3 X 26mm Shoulder Head Cap Screw	2
	15	M3 X 30mm Socket Head Cap Screw	2
	16	M3 Nut	4
	17	M3 Screw Spacer, Shoulder Type 1, 6mm L	2
	18	M3 Screw Spacer, Shoulder Type 2, 15mm L	2
STEP 6	19	3/8"-16 Nut	2

	ITEM NO.	DESCRIPTION	QTY.
STEP 1	1	ONX6+ Bracket, Right	1
	2	ONX6+ Bracket, Left	1
	3	3/8"-16 X 1" Hex Low Head Screw	2
	4	3/8" Washer	2

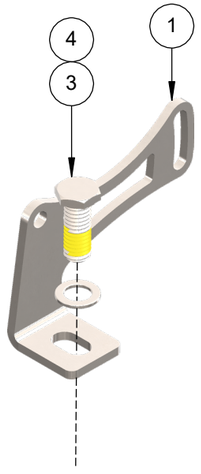

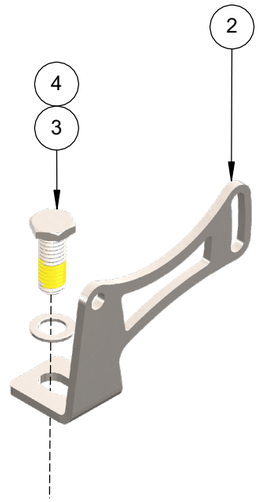

Step 1
Install bolts into brackets

ITEMS: 1 2 3 4

MAX TORQUE: **15 in-lbs**

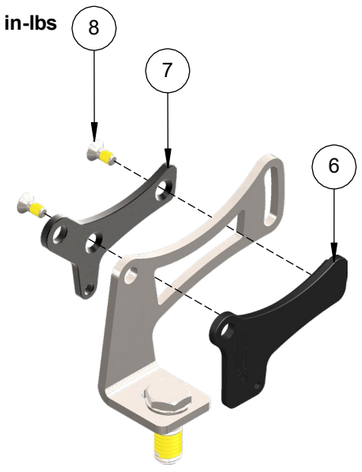

	ITEM NO.	DESCRIPTION	QTY.
STEP **2**	5	Thrust Insert, ONX6+, Left	1
	6	Thrust Insert, ONX6+, Right	1
	7	Mount Plate, ONX6+	2
	8	M4 X 9mm Flat Head Cap Screw	4

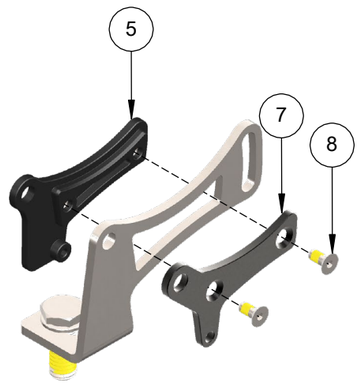

MAX TORQUE: **15 in-lbs**

Step 2

Install thrust inserts + mount plates to brackets

ITEMS: 5 6 7 8

TOOLS NEEDED: • 2.5mm HEX WRENCH

	ITEM NO.	DESCRIPTION	QTY.
STEP 3	9	ONX6+ Housing	1
	10	Pivot Plate, ONX6+	2
	11	1/4"-20 X 1" Flat Head Cap Screw, Undercut	2

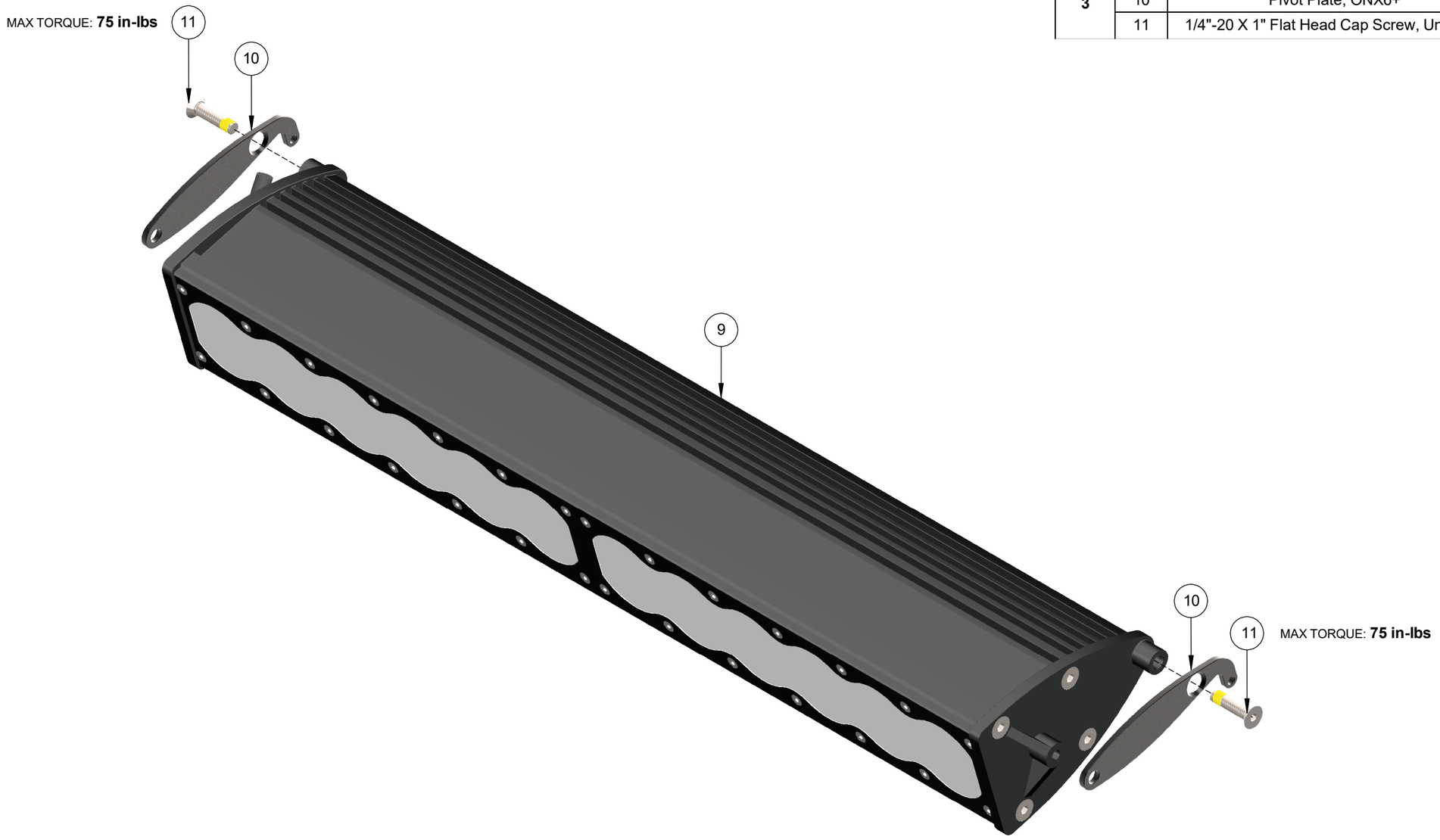

Step 3

Install pivot plates to housing

ITEMS: 9 10 11

TOOLS NEEDED: • 3mm HEX WRENCH

	ITEM NO.	DESCRIPTION	QTY.
STEP 4	12	Ø1/4" X .560" Shoulder Screw	2

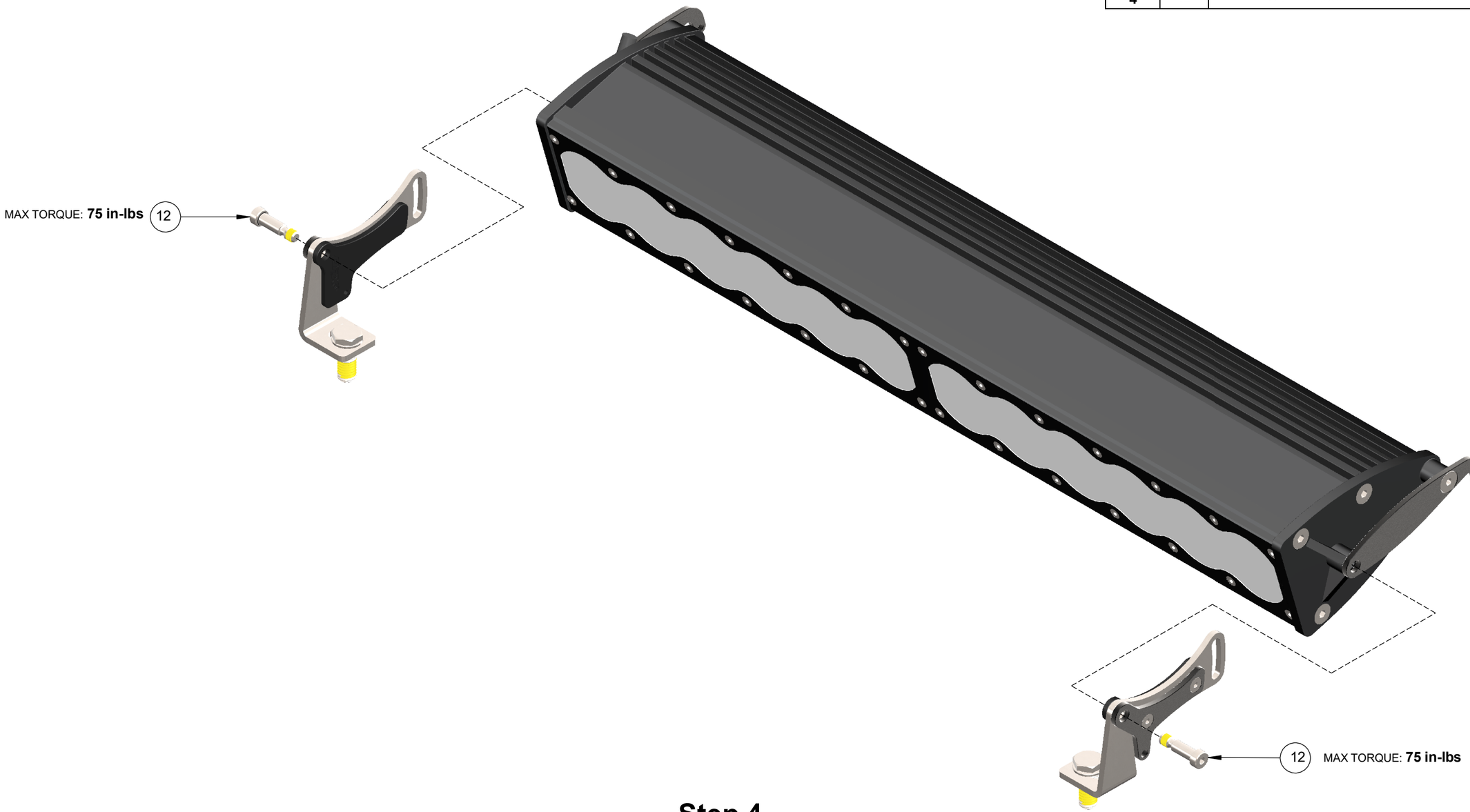

Step 4

Install shoulder screws through brackets to housing

ITEMS: 12

TOOLS NEEDED: • 3mm HEX WRENCH

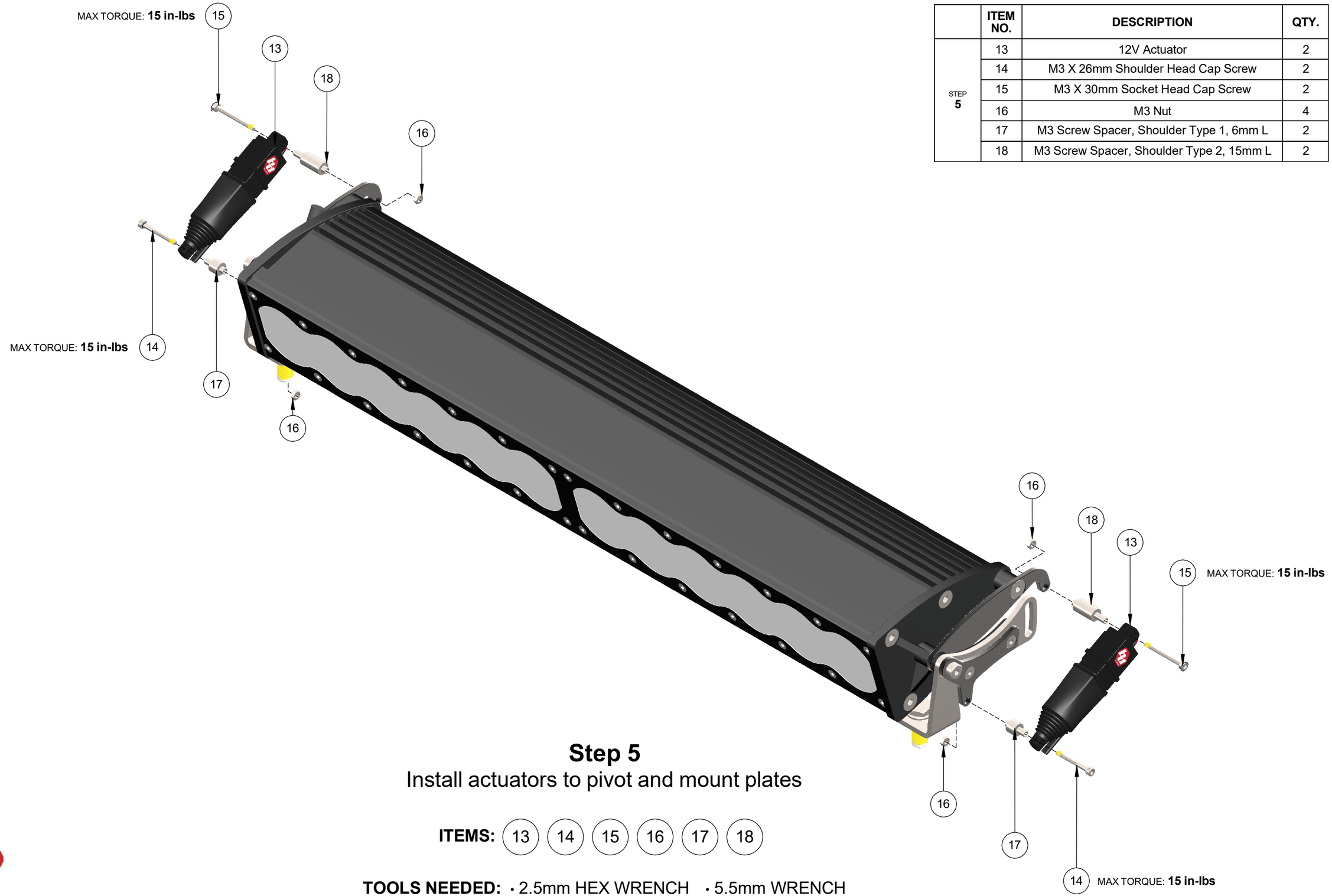

	ITEM NO.	DESCRIPTION	QTY.
STEP 5	13	12V Actuator	2
	14	M3 X 26mm Shoulder Head Cap Screw	2
	15	M3 X 30mm Socket Head Cap Screw	2
	16	M3 Nut	4
	17	M3 Screw Spacer, Shoulder Type 1, 6mm L	2
	18	M3 Screw Spacer, Shoulder Type 2, 15mm L	2

Step 5

Install actuators to pivot and mount plates

ITEMS: 13 14 15 16 17 18

TOOLS NEEDED: • 2.5mm HEX WRENCH • 5.5mm WRENCH

	ITEM NO.	DESCRIPTION	QTY.
STEP **6**	19	3/8"-16 Nut	2

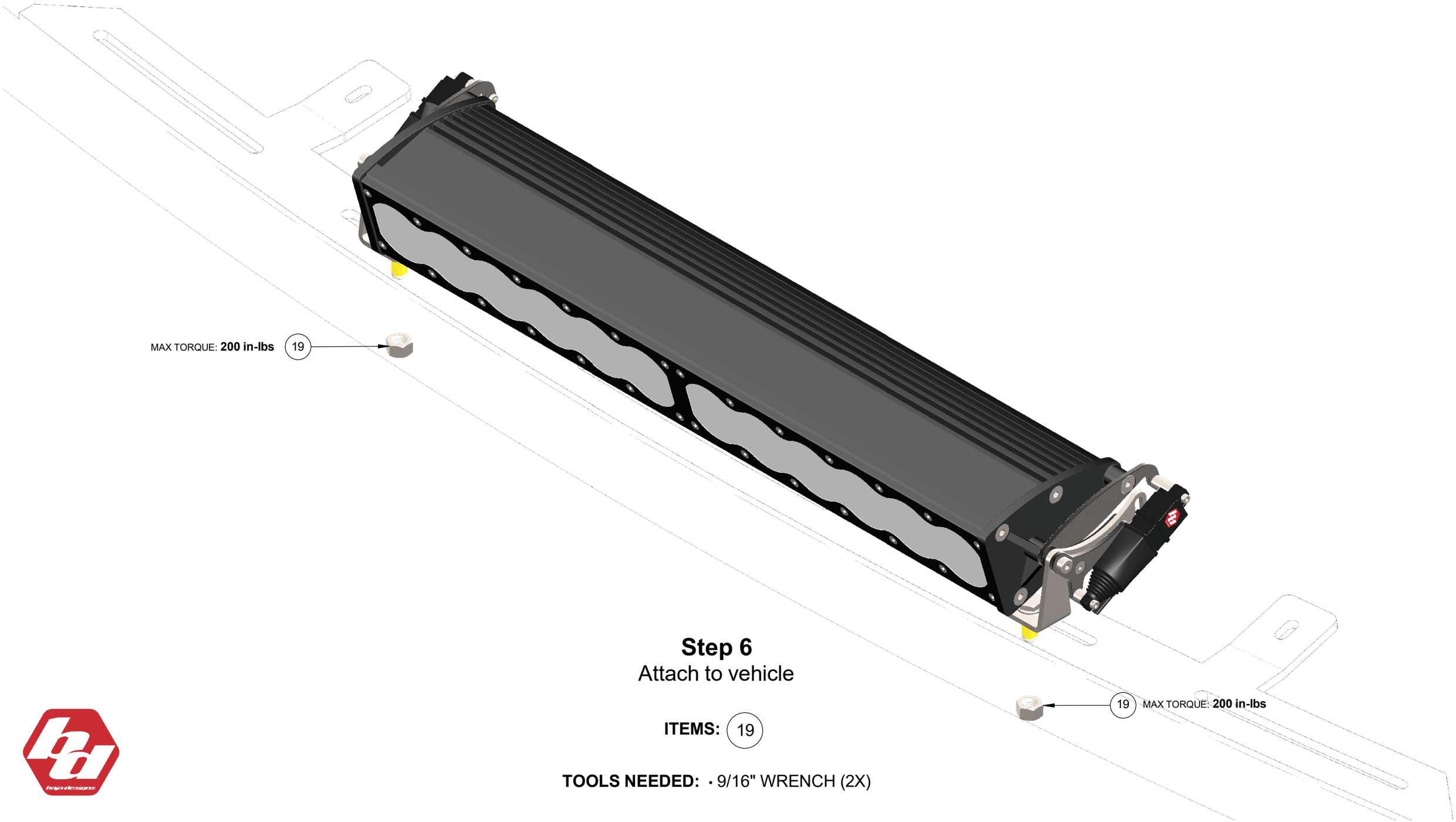

Step 6

Attach to vehicle

ITEMS: 19

TOOLS NEEDED: • 9/16" WRENCH (2X)

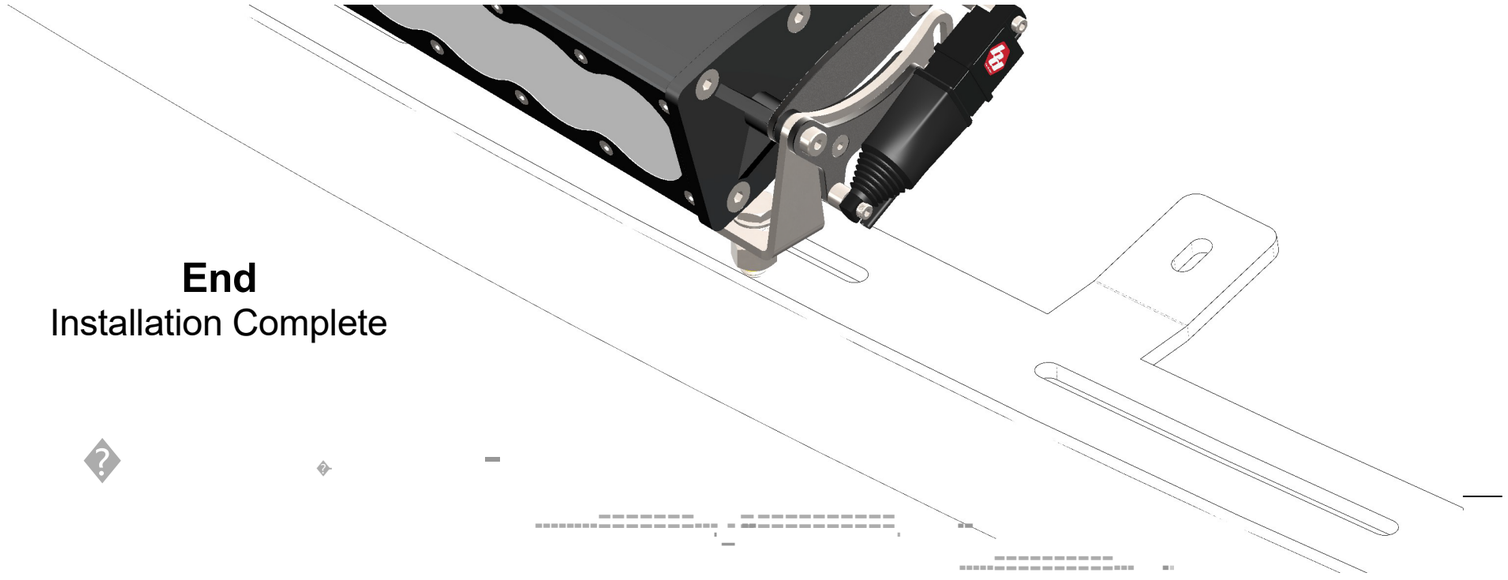

End
Installation Complete