Baja Designs 748001 Installation Instructions

748001

Part number: 748001

trailfortress.com/baja-designs-xl-sport-linkable-led-light-bar-add-a-light-748001

Scan for fitment, price and install help

baja designs
185 Bosstick Boulevard
Aan Marcos, CA 92069
Phone: 760-560-2252
Fax: 760-560-0383
info@bajadesigns.com
www.bajadesigns.com

XL Linkable

Patent Pending

1 **6061-T6 CNC Machined / Type 3 Hard Anodize**

2 **Pre-Load Device:**
- *Stainless Steel*
- *Durable Micro-Tex Coating*

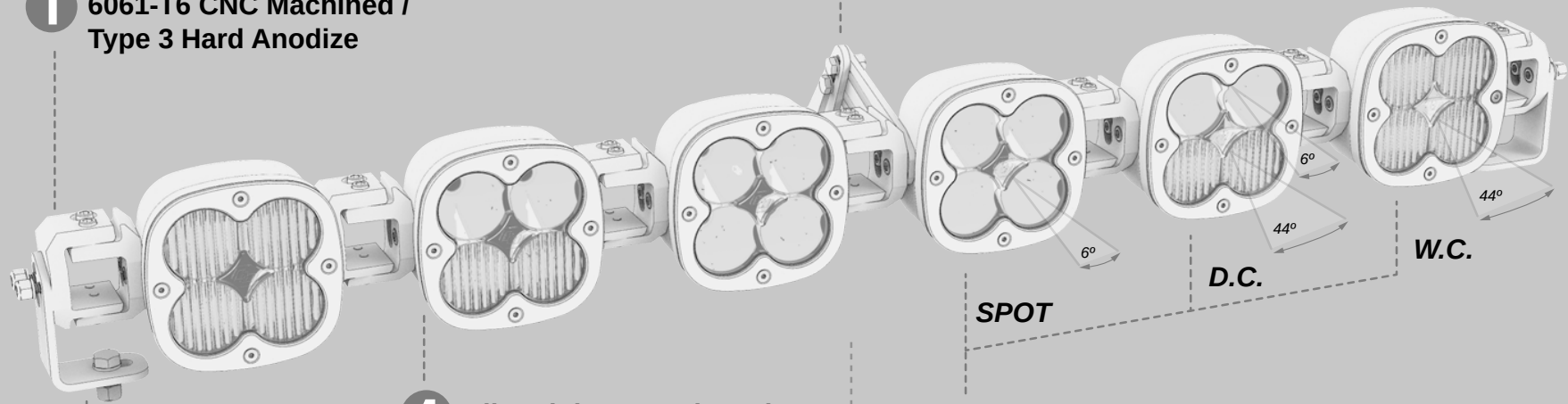

3 **Universal Mounting Bracket**
- *Stainless Steel*
- *Durable Micro-Tex Coating*

4 **All Stainless Steel Hardware**

5 **Lens Patterns and Material:**
- *Wide Cornering [W.C.] (44º)*
- *Driving Combo [D.C.] (6º Top, 44º Bottom)*
- *Spot (6º)*
- *Polycarbonate w/ Hard Coating*

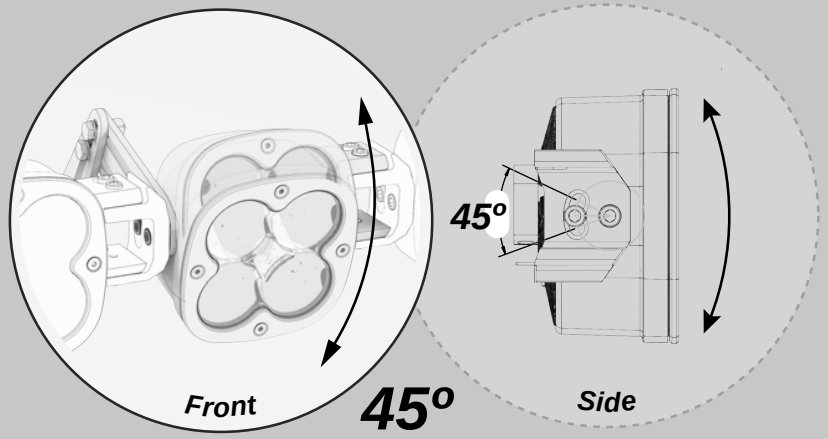

Adjustment

! Some listed items are offered separately.

Patent Pending

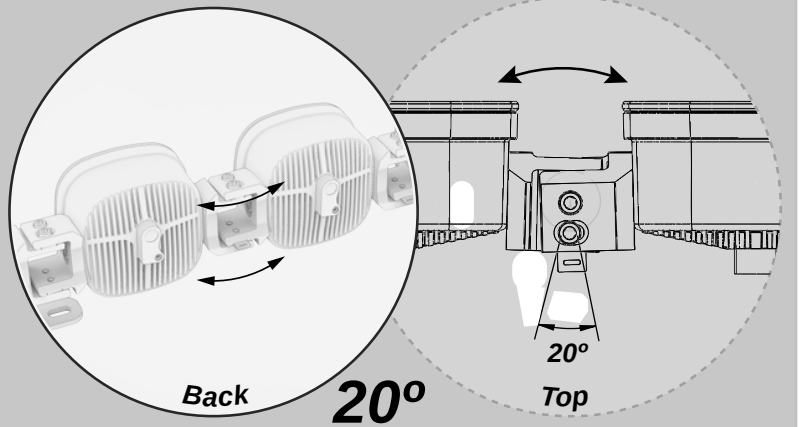

baja designs
185 Bosstick Boulevard
Aan Marcos, CA 92069
Phone: 760-560-2252
Fax: 760-560-0383
info@bajadesigns.com
www.bajadesigns.com

XL Linkable

Patent Pending

Out of the Box

Perform the following on a flat table after receiving! - Do this before mounting.

Figure 1

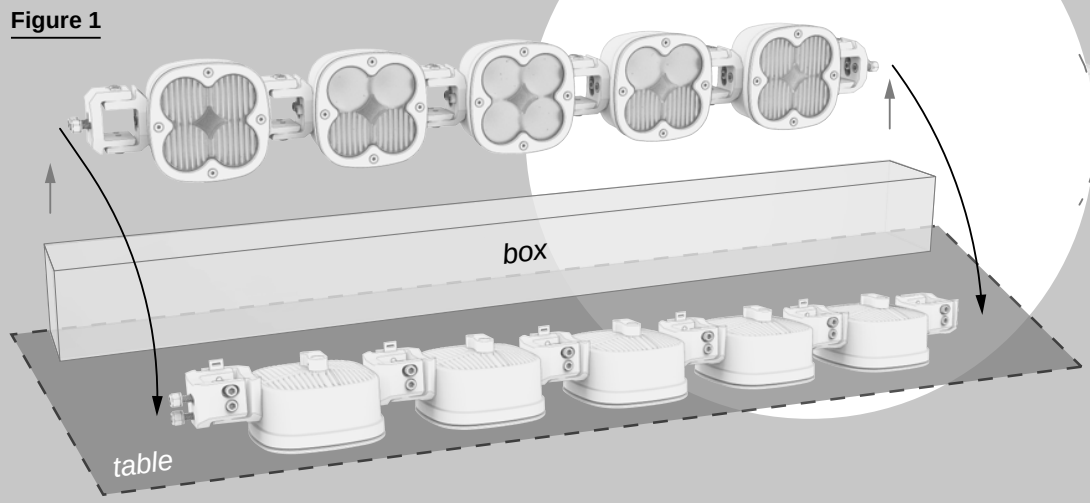

Figure 2

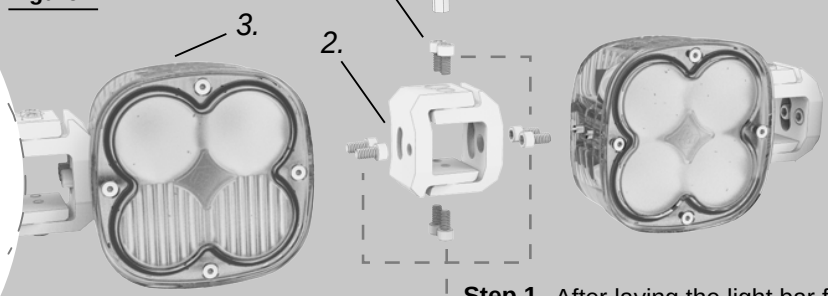

Step 1. After laying the light bar flat on a table, start from one side and adjust one axis at a time by loosening the indicated 1/4"-20 screws[1] on each link[2] to allow each light pod[3] to rest flat on the table. A 3/16" Allen Wrench[4] is included.

Step 2. With each light pod flat against the table, tighten all the 1/4"-20 screws

Assembling Pre-Load Mechanism

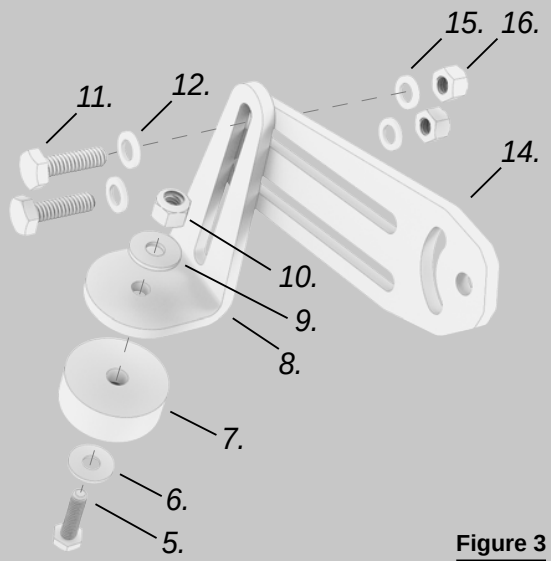

Figure 3

Step 3. ***Required for (6-8) Lights***
Using a 7/16" socket and wrench, assemble items (5 - 10). Refer to Figure 4 and Figure 6 (on next page) for the location and orientaion of the Pre-Load Base[14] and Extension[8].

5. 1/4"-20 x 1.00" Hex Head Bolt
6. 1/4" Oversized Washer
7. Rubber Bump Stop
8. Pre-Load Base Extension
9. 1/4" Oversized Washer
10. 1/4" Nylock Nut

Step 4. Then, assemble items (11 - 16) in the order shown in Figure 3.

11. 1/4"-20 x 7/8" Head Head Bolt
(12, 15.) 1/4" Washer
14. Pre-Load Base
16. 1/4" Nylock Nut

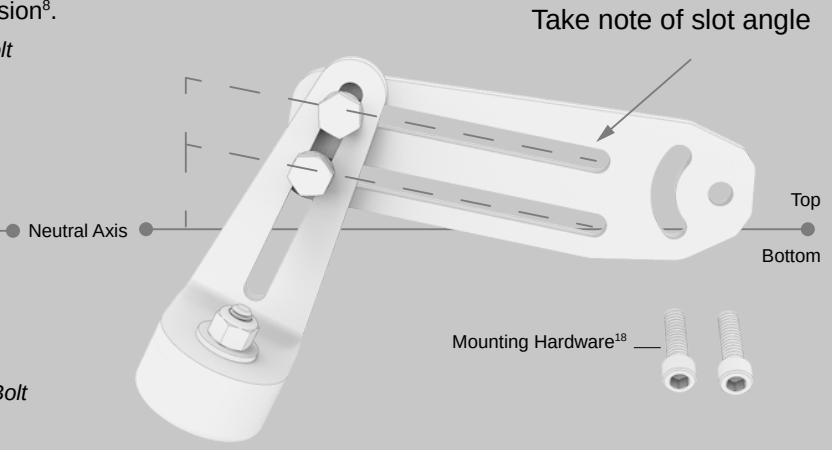

Figure 4

baja designs
185 Bosstick Boulevard
Aan Marcos, CA 92069
Phone: 760-560-2252
Fax: 760-560-0383
info@bajadesigns.com
www.bajadesigns.com

XL Linkable

Patent Pending

Attaching Pre-Load Mechanism

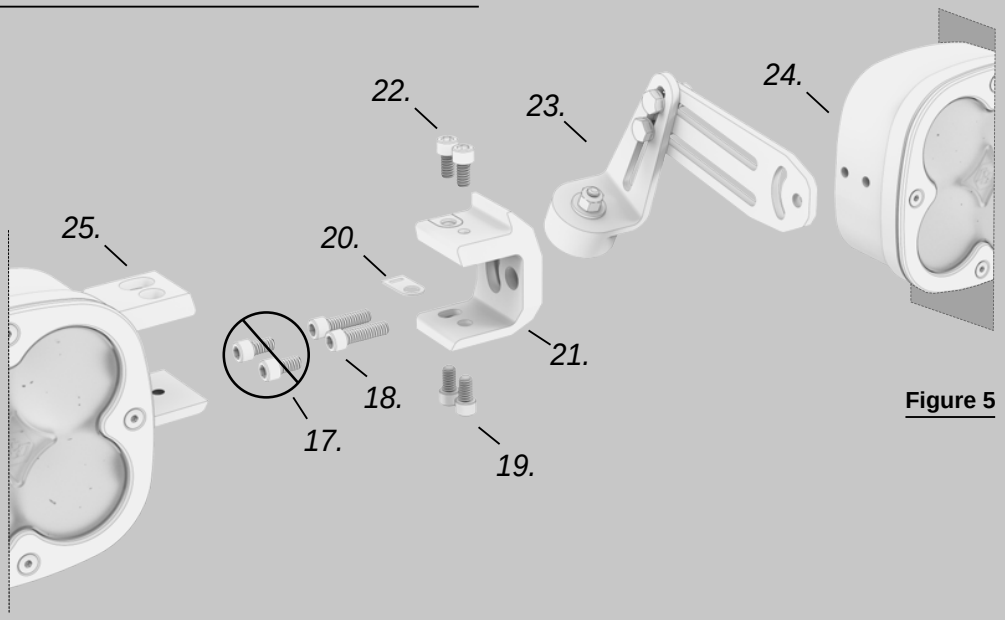

Figure 5

Step 5. Refer to Figure 6 in order to locate which Socket Head Cap Screws[19, 22] to unscrew.

For the number of lights the XL Linkable has, locate that diagram in Figure 6. Unscrew the top and bottom Socket Head Cap Screws to the right of the Pre-Load Mechanism that secure the XL Links together. Separate as shown in Figure 5.

(17, 19, 22.) 1/4"-20 x 7/16 Socket Head Cap Screw

Step 6. Replace the 1/4"-20 x 7/16" Cap Screw[17] with the included 1/4"-20 x 7/8" Cap Screw[18]. Assemble items (18-25) in the order shown in Figure 5.

17. 1/4"-20 x 7/16 Socket Head Cap Screw
18. 1/4"-20 x 7/8" Socket Head Cap Screw
20. Zip Tie Tab (on harness)
(21, 25.) Link
23. Pre-Load Mechanism
24. XL Housing

Positioning Pre-Load Mechanism

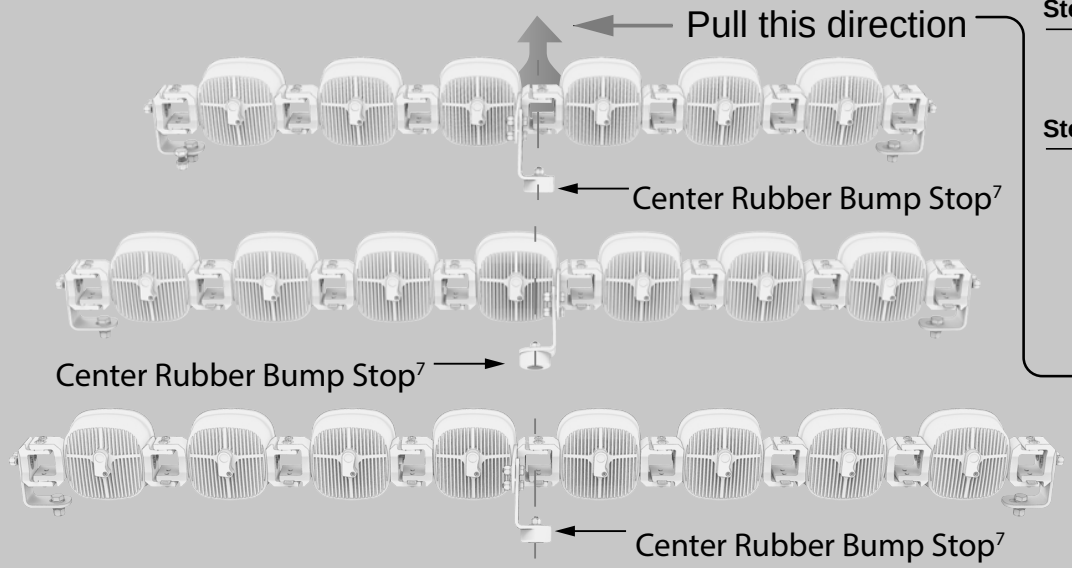

Figure 6

Step 7. Check to make sure the Rubber Bump Stop[7] is centered on the XL Linkable as shown in Figure 6.

Step 8. **The Pre-Load Mechanism is required for 6+ lights.** To reduce vibration and increase stiffness of the XL Linkable, add pre-load.

Make sure all Socket Head Cap Screws are tight. Using a 7/16" ratchet and wrench, loosen the 1/4"-20 x 7/8" Hardware[11] a quarter turn such that it can pivot.

Pull the XL Linkable away from the vehicle (indicated by shaded arrow in Figure 6), and then tighten the Hardware[11] with the Rubber Bump Stop[7] firmly resting on the included 3M® Clear Bra[26], perpindicular (Figure 7), on a sturdy surface.

Figure 7

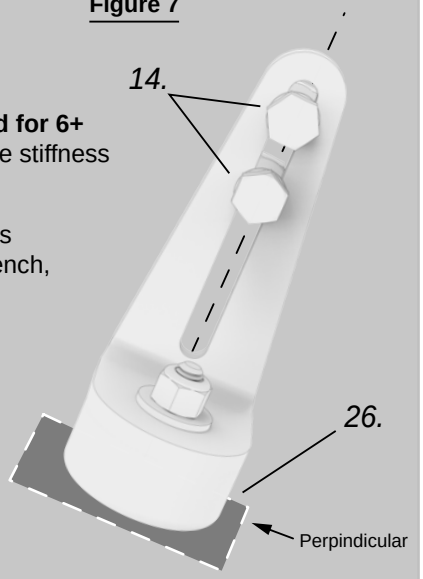

185 Bosstick Boulevard
Aan Marcos, CA 92069
Phone: 760-560-2252
Fax: 760-560-0383
info@bajadesigns.com
www.bajadesigns.com

XL Linkable

Patent Pending

Liability Disclaimer

The XL Linkable has been designed and tested around Baja Designs' vehicle specific mounting solutions, and under responsible driving conditions. Baja Designs releases liability on damage that can occur by using a third-party mounting solution. Baja Designs is not liable under any circumstance for damages or bodily harm due to irresponsible driving, improper application/mounting, and/or negligence of recommended maintenance.

· It is advised that installation be performed by a Baja Designs Authorized Dealer.

· Installation is recommended to be performed by at least two individuals in a safe work environment.

· The recommended number and location(s) of the Baja Designs Pre-Load Mechanism(s) must be installed for a specific vehicle.

Please Shred Responsibly

How to Mount

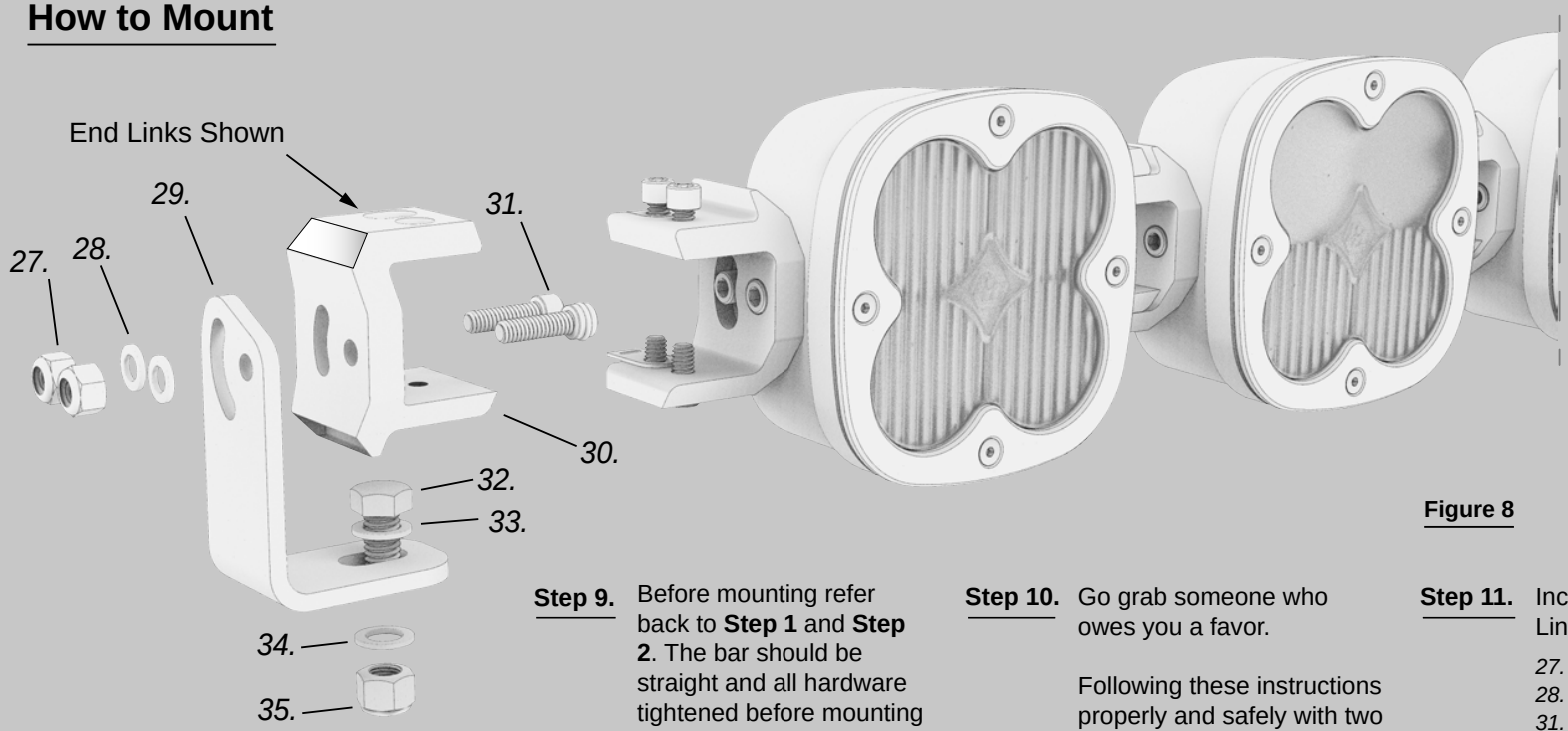

Figure 8

Step 9. Before mounting refer back to **Step 1** and **Step 2**. The bar should be straight and all hardware tightened before mounting the XL Linkable to any brackets.

Confirm that the Pre-Load Mechanism[23] is installed properly. Refer to **Step 3** through **Step 8**.

Step 10. Go grab someone who owes you a favor.

Following these instructions properly and safely with two people will make for a properly aimed and adjusted light that you can shred 'dem trails and dunes with.

Step 11. Included in the parts bag for the XL Linkable are four of each:

27. 1/4" Nylock Nut
28. 1/4" Washer
31. 1/4"-20 x 7/8" Socket Head Cap Screw

Without removing any Hardware, secure the bracket (XL Universal Bracket[29] shown) using the two 1/4"-20 x 7/8" Socket Head Cap Screws[31] and 1/4" Nylock Nuts[30] on each side in orientation shown in Figure 8.

Step 12. Using the included hardware in the XL Linkable Universal Bracket Kit (available separately), orient the Hardware[(32, 33, 34, 35)] as shown in Figure 8.

Tighten the 3/8" hardware with a 9/16" ratchet and wrench.

Adjust the pitch of the entire XL Linkable and tighten in place.

32. 3/8" x 7/8" Hex Head Bolt
(33, 34.) 3/8" Washer
35. 3/8" Nylock Nut

baja designs
185 Bosstick Boulevard
Aan Marcos, CA 92069
Phone: 760-560-2252
Fax: 760-560-0383
info@bajadesigns.com
www.bajadesigns.com

XL Linkable

Patent Pending

Away from vehicle

Figure 9

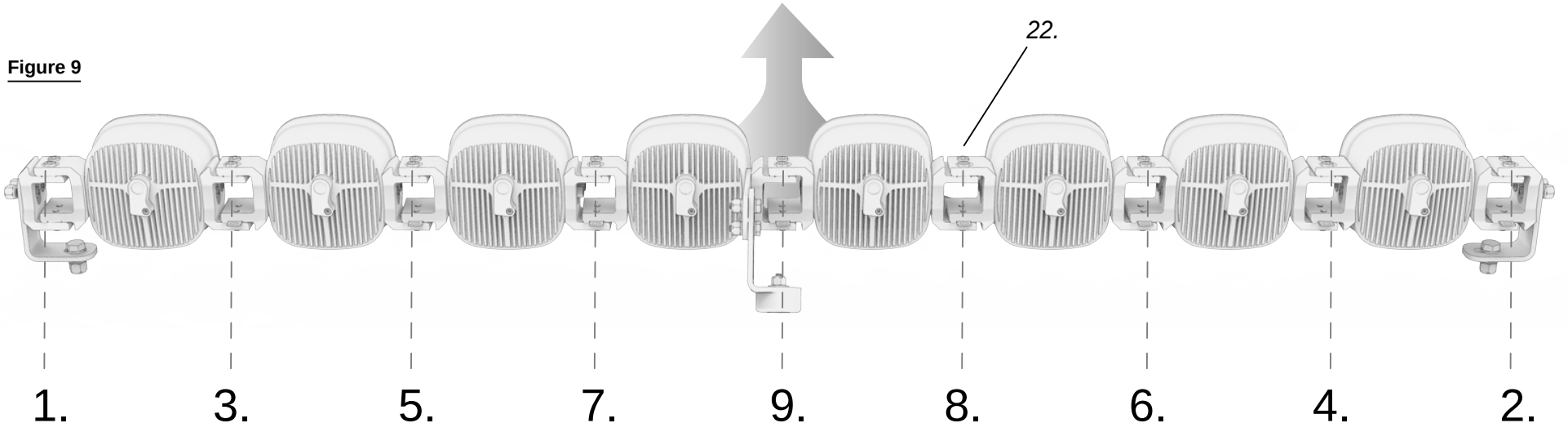

How to Arc

Step 13. Start at the set of links indicated by the **number 1** in the diagram above. Barely loosen BUT DO NOT REMOVE the **top and bottom** 1/4”-20 x 7/16” Socket Head Cap Screws[22] using the included 3/16” Allen Wrench[4] or a Hex Bit.

Transition to the opposite side. In this case, loosen the top and bottom hardware at the set of links indicated by the **number 2.**

Loosen in pairs (i.e. 1&2, 3&4), and pull the XL Linkable away from the vehicle as shown in Figure 9 after loosening each pair of links until the desired arc and light spread are achieved.

Step 14. Tighten, in pairs and in the reverse order as done previously, making sure that each pair of links is tight before moving onto the next pair of links. Pull the XL Linkable away from the vehicle with steady force while tightening the Hardware[22].

How to Pitch

Step 15. Removing XL Links are not necessary to adjust the pitch.

To individually pitch individual or sets of XL’s, use the included 3/16” Drive Allen Wrench[4] to loosen the four outmost 1/4”-20 Socket Head Cap Screws[36] securing the XL Link[37] to the XL Light[38].

This will allow you pitch entire sections of the XL Linkable.

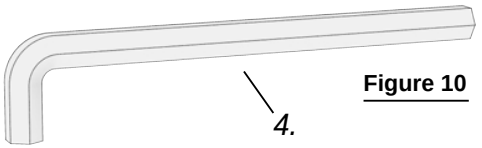

Figure 10

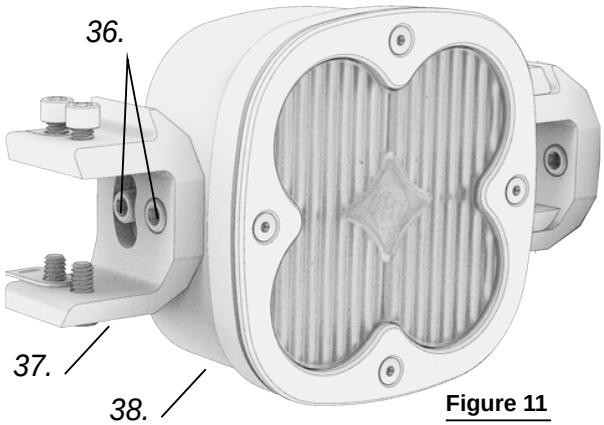

Figure 11

baja designs
185 Bosstick Boulevard
Aan Marcos, CA 92069
Phone: 760-560-2252
Fax: 760-560-0383
info@bajadesigns.com
www.bajadesigns.com

XL Linkable

Patent Pending

General Dimensions

At 13.8 Volts

Lights	Lens Patterns	(Straight - Arced)	Power
3	 D.C. SPOT D.C	(20.77 - 20.82”)	7 8 W
4	 D.C. SPOT SPOT D.C	(26.94 - 26.99”)	104W
5	 W.C D.C. SPOT D.C. W.C	(33.14 - 33.16”)	130W
6	 W.C D.C. SPOT SPOT D.C. W.C	(39.31 - 39.32”)	156W
7	 W.C D.C. SPOT SPOT SPOT D.C. W.C	(45.49 - 45.47”)	182W
8	 W.C. D.C. SPOT SPOT SPOT SPOT D.C. W.C.	(51.67 - 51.20”)	208W

185 Bosstick Boulevard
Aan Marcos, CA 92069
Phone: 760-560-2252
Fax: 760-560-0383
info@bajadesigns.com
www.bajadesigns.com

XL Linkable

Patent Pending

Performace Overview Diagrams

Straight Versus Arced

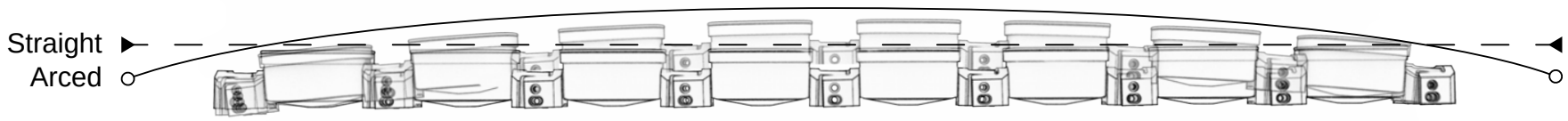

Optical Heat Map

8 Lights

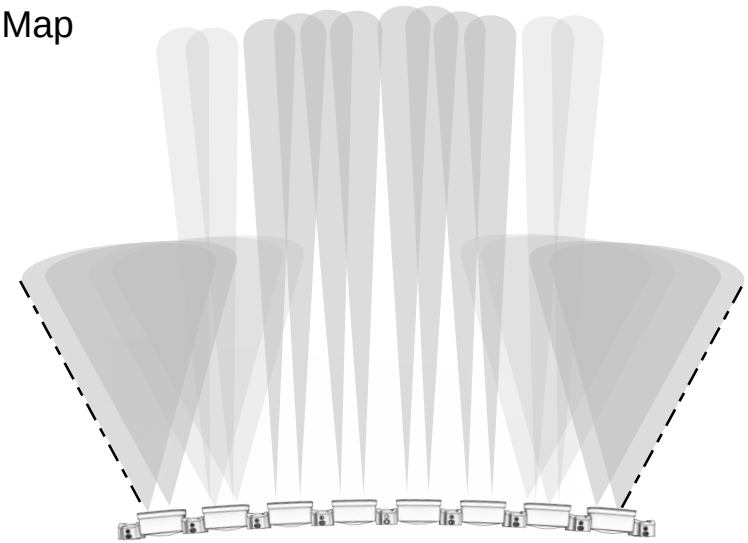

Straight

44º Spread

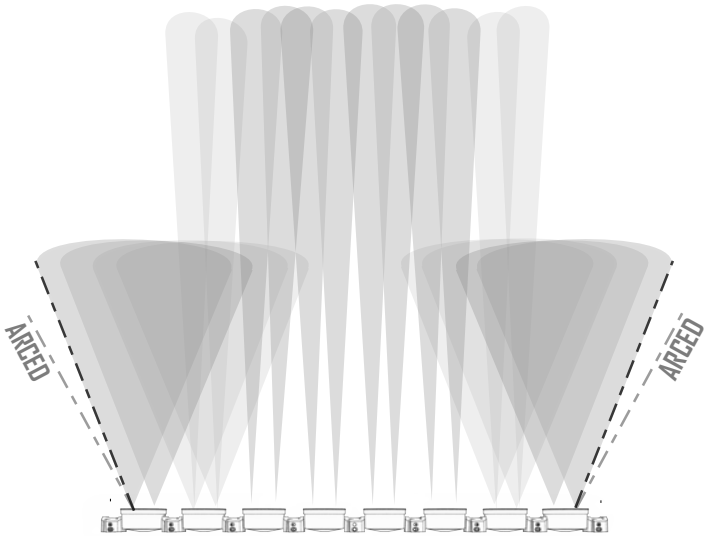

Arced

64º Spread

Daylight · MoistureBlock · uService · CopperDrive · ClearView · BMT



LIMITED LIFETIME WARRANTY

Baja Designs proudly offers a LIFETIME WARRANTY against manufacturer's defect on all of the products that we manufacture.

These are comprehensive warranties; other than the exclusions below – you're covered. If your LED or HID bulb burns out, you're covered. Additionally, cutting off our connector or changing your lenses does not automatically void your warranty.

Exclusions:
Installation errors, abuse, misuse or crash damage. You must be the original owner of the product and can supply proof of purchase.

Baja Designs manufactures its own products as well as resells products manufactured by others. Baja Designs makes no express or implied warranties on products not manufactured by Baja Designs including without limitation any warranties or merchantability and fitness for a particular purpose. We will however, pass on all warranties made by the manufacturer, who has sole responsibility for performing such warranties.

Baja Designs will pay the freight if your product is less than 90 days old, otherwise defective products must be returned to Baja Designs, Inc., freight prepaid. At our option, we will repair or replace items in question and return them at no charge. If the identical product is no longer available, we will replace with a similar product of equal value. Baja Designs Inc. will not be responsible for any indirect or consequential damages in connection with defective merchandise.

Items purchased through a Baja Designs authorized dealer must be returned through the dealer. Only available on LED auxiliary lights and product must be in sellable condition at MSRP. Product that has been damaged in any way after the original purchase date will be excluded from this guarantee

Indemnification:
Buyer hereby acknowledges off-roading, racing and driving at night are dangerous activities and that the products and/or supplies purchased from Baja Designs are used in an inherently dangerous activity that may endanger life and limb; and in no event shall the seller, or seller's heirs and assigns, be held liable for consequential damages, nor shall seller's liability on any claim for damages arising out of or connected with the sale, delivery, or use of purchased products and/or supplies exceed the purchase price of the products and/or supplies.

trailfortress.com/baja-designs-xl-sport-linkable-led-light-bar-add-a-light-748001