Baja Designs 547813 Installation Instructions

547813

Part number: 547813

trailfortress.com/baja-designs-s2-sport-black-led-auxiliary-light-pod-pair-547813

Scan for fitment, price and install help

baja designs®
THE SCIENTISTS OF LIGHTING
185 BOSSTICK BOULEVARD SAN MARCOS, CA 92069
PHONE 760-560-2252 FAX 760-560-0383
INFO@BAJADESIGNS.COM WWW.BAJADESIGNS.COM

SUPERIOR LIGHTING SINCE 1972

S1, S2, AND SQUADRON MOUNTING/ WIRING

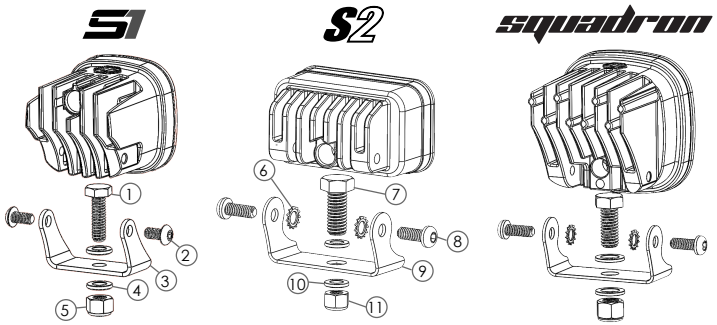

S1:

① 1/4"-20 x 0.875"
② M5 x 12mm
③ S1 Bracket
④ 1/4" Washer
⑤ 1/4" Nylock Nut

S2 & Squadron:

⑥ Serrated Washer
⑦ 3/8" Bolt
⑧ M6 Bolt
⑨ S2/Squadron Bracket
⑩ 3/8" Washer
⑪ 3/8" Nylock Nut

1. Begin by removing the light and bracket from the box and assemble using referenced image.
2. Locate the hardware bag(s) included in the box. For the S1, place the 1/4-20 x 0.875" bolt through the S1 Bracket with associated washers and lock nut as shown. For the S2 and Squadron, place the 3/8" bolt through the bottom of the bracket with associated washers. Do not fully tighten the lower mounting bracket hardware until the light has been aligned.
3. Mount the bracket to the light using the remaining 5mm (S1) or 6mm (S2 & Squadron) hardware and associated washers, as shown in the picture.

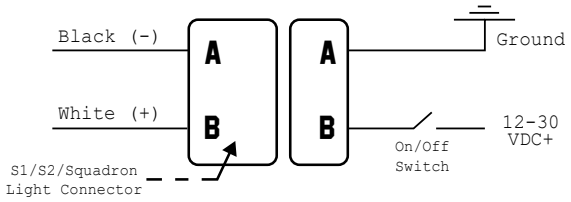

As with any electrical accessory, Baja Designs lights must have ciruit protection (fuse or circuit breaker)

ANGLED FLUSH MOUNTING

(The following instructions are only for the Angled Squadron Product)

1. Use the template below. Cut out the template and hold it on the desired flat mounting surface. Use a 3/8" drill for the single vertical hole and a 1/4" drillbit for the two horizontal holes. Deburr all edges.
2. Install the provided O-Ring on the back of the light in the shaded groove. *This will help prevent water from entering behind the light, but is not guaranteed*.
3. Feed the light's cord through the larger, 3/8 hole and use the supplied connector to attach it to the light. Refer to the electrical diagram on the bottom left of this page.
4. Use the provided 1/4"-20 bolts and associated hardware to fasten the light to the mounting surface. Use Loctite when installing the hardware to ensure they remain securely fastened.

Due to inconsistencies of mounting surfaces, please ensure even pressure is applied all around the O-Ring. Use additional silicone or water proofing material if needed.

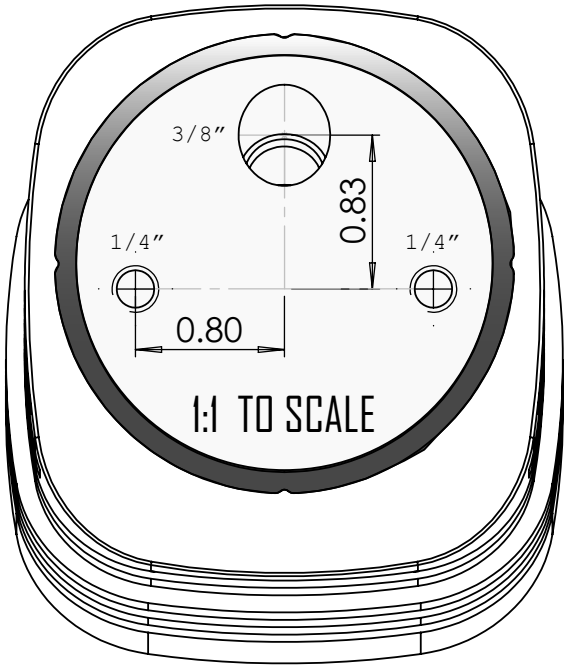

FLUSH MOUNTING

To Proceed, Buy a 2.5" Hole Saw
Or Grab A Cold One, Both Will Work!

1. **Grab a tape measure to make sure the hole will be no larger than 2 and 5/8"!** Or, use this template, where **this** text is inside for S1. Cut out the template and hold it on the desired flat mounting surface. Trace first before cutting out the material. Make sure the light slides in the newly cut opening. Use your new coaster.
2. Hold the light flush to the opening. Mark the four outer holes, remove the light, and drill with a 11/64" drillbit.
3. Remount the light using the supplied hardware and connect the light to the harness.

FLUSH MOUNTING

1. Use this template, where **this** text is inside for S2. Cut out the template and hold it on the desired flat mounting surface. Trace the template on the mounting surface before cutting out the material. Make sure the light slides in the newly cut opening.
2. Hold the light flush to the opening. Mark the four outer holes, remove the light, and drill with a 11/64" drillbit.
3. Remount the light using the supplied hardware and connect the light to the harness.

FLUSH MOUNTING

1. Use this template, where **this** text is inside for **Squadron**. Cut out the template and hold it on the desired flat mounting surface. Trace the template on the mounting surface before cutting out the material. Make sure the light slides in the newly cut opening.
2. Hold the light flush to the opening. Mark the four outer holes, remove the light, and drill with a 11/64" drillbit.
3. Remount the light using the supplied hardware and connect the light to the harness.

trailfortress.com/baja-designs-s2-sport-black-led-auxiliary-light-pod-pair-547813



LIMITED LIFETIME WARRANTY

Baja Designs proudly offers a LIFETIME WARRANTY against manufacturer's defect on all of the products that we manufacture.

These are comprehensive warranties; other than the exclusions below – you're covered. If your LED or HID bulb burns out, you're covered. Additionally, cutting off our connector or changing your lenses does not automatically void your warranty.

Exclusions:
Installation errors, abuse, misuse or crash damage. You must be the original owner of the product and can supply proof of purchase.

Baja Designs manufactures its own products as well as resells products manufactured by others. Baja Designs makes no express or implied warranties on products not manufactured by Baja Designs including without limitation any warranties or merchantability and fitness for a particular purpose. We will however, pass on all warranties made by the manufacturer, who has sole responsibility for performing such warranties.

Baja Designs will pay the freight if your product is less than 90 days old, otherwise defective products must be returned to Baja Designs, Inc., freight prepaid. At our option, we will repair or replace items in question and return them at no charge. If the identical product is no longer available, we will replace with a similar product of equal value. Baja Designs Inc. will not be responsible for any indirect or consequential damages in connection with defective merchandise.

Items purchased through a Baja Designs authorized dealer must be returned through the dealer. Only available on LED auxiliary lights and product must be in sellable condition at MSRP. Product that has been damaged in any way after the original purchase date will be excluded from this guarantee

Indemnification:
Buyer hereby acknowledges off-roading, racing and driving at night are dangerous activities and that the products and/or supplies purchased from Baja Designs are used in an inherently dangerous activity that may endanger life and limb; and in no event shall the seller, or seller's heirs and assigns, be held liable for consequential damages, nor shall seller's liability on any claim for damages arising out of or connected with the sale, delivery, or use of purchased products and/or supplies exceed the purchase price of the products and/or supplies.

trailfortress.com/baja-designs-s2-sport-black-led-auxiliary-light-pod-pair-547813