TRAIL FORTRESS

BUILT FOR THE TRAIL. CHECKED FOR YOUR TRUCK.

Baja Designs 452013 Installation Instructions

452013

Part number: 452013

trailfortress.com/baja-designs-onx6-straight-led-light-bar-452013

Scan for fitment, price and install help

baja designs
The Scientists of Lighting

OnX6 LED Light Bar Mounting

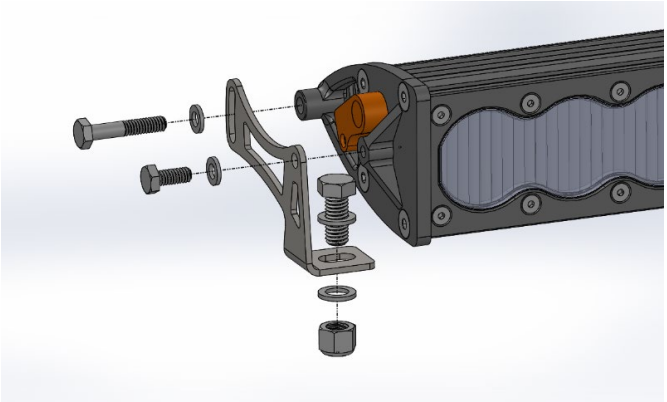

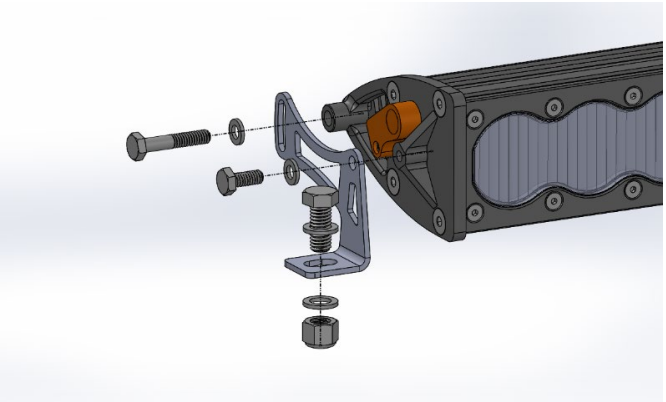

S8 LED Light Bar Mounting

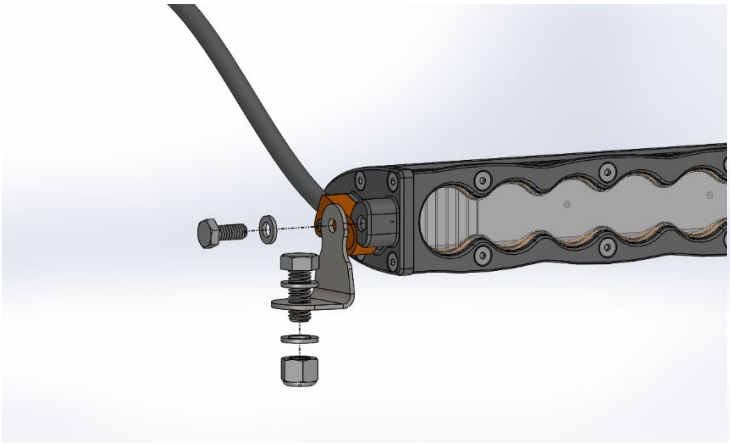

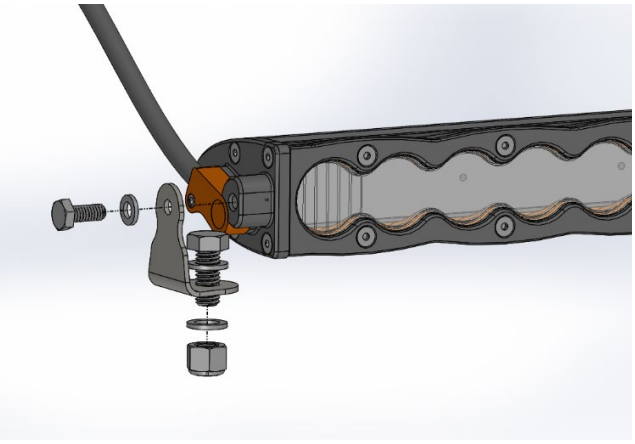

Baja Designs OnX6 Wiring

All OnX6 Light bars have a microprocessor that performs thermal management of the LED's and allow a **dimming mode**. If you want to use the dimming mode of the light bar, a separate switch is required to ground the green control wire (Pin C). We also include a plug n play low adapter if you want the light always dimmed but don't want to wire a switch. If you do not need this feature, then a single standard on/off switch is all that is required.

Wiring: 3 Pin WeatherPak Connector

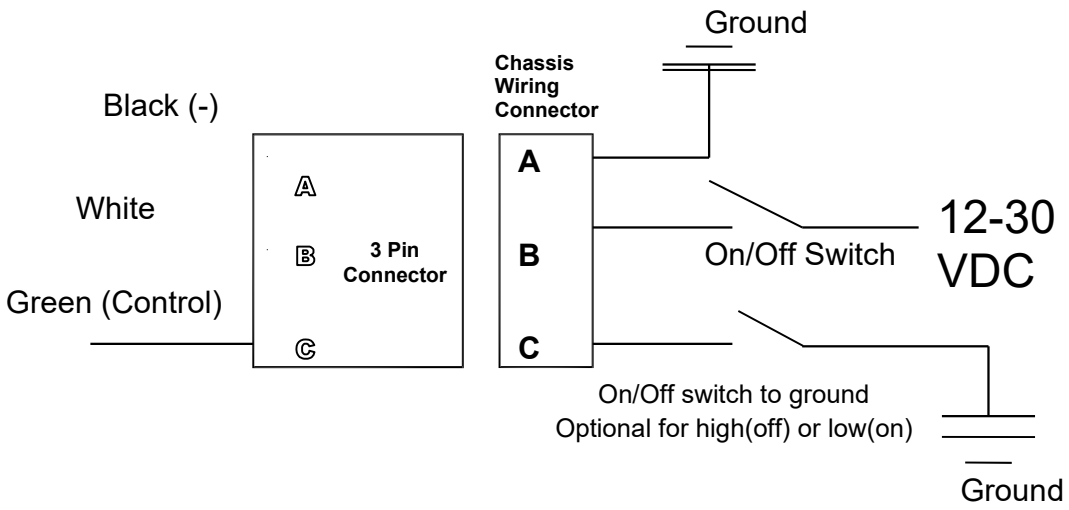

When using the 2nd Switch, the light will dim to 75% power. Turning the switch off will toggle back to full power. This is to be used when your vehicles charging system cannot produce the necessary voltage (13.5V or higher) to keep the vehicle charging. Included with your light is an inline "Hi-Low" adapter in case you **DO NOT** want to wire a secondary "On/Off" switch.

BMT technology: The OnX6 also features **B**attery **M**anagement **T**echnology which regulates the amount of amperage the light will draw in case of low voltage situations. This will help prolong the life of the vehicles battery by reducing the lights wattage as well as prevent the light from drawing too many amps through the vehicles electrical system.

Moisture Block: The Moisture Block functions exactly as it sounds, completely blocking moisture or water from climbing its way up the cord into your LED light.

Cutting past the Moisture Block will ***VOID YOUR WARRANTY****.*

Baja Designs OnX6 Laser and S8 Wiring

The all new OnX6 Hybrid Laser has the middle laser section requires power to pin C which can be tied directly in with pin B if you want the entire light controlled on one switch or you can control the laser section independently on its own second on/off switch.

All S8 Light bars feature off/on and a unique backlit feature. To operate the backlit feature a second off/on switch will be required to provide positive power to Pin C. If you do not need this feature, then a single standard on/off switch is all that is needed.

Connector Wiring (WeatherPak 3 Pin Connector)

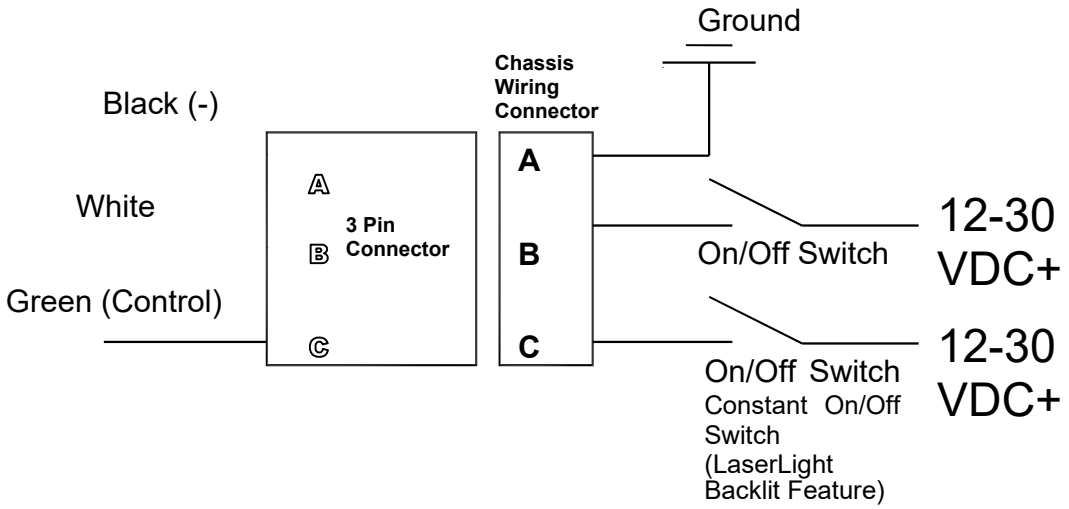

When using the optional second switch, depressing the switch will turn on the Laser section/backlit feature. Depressing the switch again will turn the backlit light off.

Moisture Block: The Moisture Block functions exactly as it sounds, completely blocking moisture or water from climbing its way up the cord into your LED light.

*Cutting past the Moisture Block will **VOID YOUR WARRANTY**.*

Baja Designs chooses stainless steel mounting bolts and hardware for their corrosion resistance and appearance. Stainless fasteners can be prone to galling or sticking during installation so we recommend a thread lubricant or anti-seize on the threads when assembling. Avoid using high speed power tools to assemble because the heat generated from friction can promote seizing.