Baja Designs 448177 Installation Instructions

Raptor Squadron/S2 SAE Pro Fog Pocket Kit

Part number: 448177

trailfortress.com/baja-designs-ford-raptor-squadron-s2-sae-pro-fog-pocket-light-kit-448177

Scan for fitment, price and install help

Ford, Raptor 2017-2018 Fog Pocket Kits

44-7564, 44-7566, 44-7567, 44-8172, 44-8173, 44-8176, 44-8177



2950 Norman Strasse Rd • San Marcos • CA • 92069

Phone 760-560-2252 • Fax 760-560-0383

info@bajadesigns.com • www.bajadesigns.com

LIMITED LIFETIME WARRANTY

Baja Designs proudly offers a LIFETIME WARRANTY against manufacturer's defect on all of the products that we manufacture.

These are comprehensive warranties; other than the exclusions below – you're covered. If your LED or HID bulb burns out, you're covered. Additionally, cutting off our connector or changing your lenses does not automatically void your warranty.

Exclusions:

Installation errors, abuse, misuse or crash damage. You must be the original owner of the product and can supply proof of purchase.

Baja Designs manufactures its own products as well as resells products manufactured by others. Baja Designs makes no express or implied warranties on products not manufactured by Baja Designs including without limitation any warranties or merchantability and fitness for a particular purpose. We will, however, pass on all warranties made by the manufacturer, who has sole responsibility for performing such warranties.

Baja Designs will pay the freight if your product is less than 90 days old, otherwise defective products must be returned to Baja Designs, Inc., freight prepaid. At our option, we will repair or replace items in question and return them at no charge. If the identical product is no longer available, we will replace with a similar product of equal value. Baja Designs Inc. will not be responsible for any indirect or consequential damages in connection with defective merchandise.

Items purchased through a Baja Designs authorized dealer must be returned through the dealer. Only available on LED auxiliary lights and product must be in sellable condition at MSRP. Product that has been damaged in any way after the original purchase date will be excluded from this guarantee

Indemnification:

Buyer hereby acknowledges off-roading, racing and driving at night are dangerous activities and that the products and/or supplies purchased from Baja Designs are used in an inherently dangerous activity that may endanger life and limb; and in no event shall the seller, or seller's heirs and assigns, be held liable for consequential damages, nor shall seller's liability on any claim for damages arising out of or connected with the sale, delivery, or use of purchased products and/or supplies exceed the purchase price of the products and/or supplies.

Instructions:

1. Locate bumper support rod underneath the vehicle. Loosen the inner bolt (white arrow) and remove the outer bolt (white circle) holding the support rod. Once the outer bolt has been removed and the inner bolt is loose swing the support rod out of the way. (Figure 1)

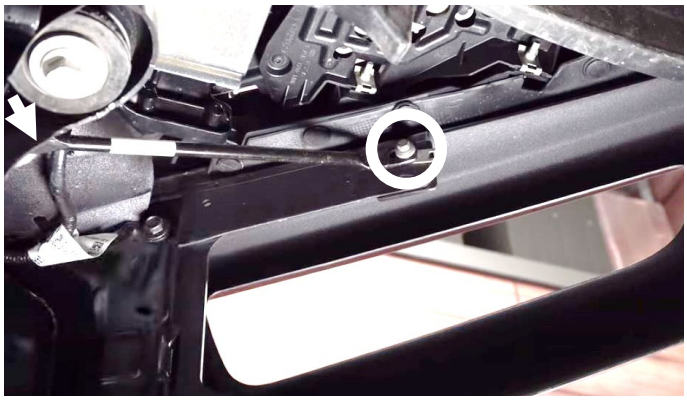

FIGURE 1

2. Mount bracket in position shown in photo below using the two supplied bolts, four washers, two lock nuts and the factory bolt to secure bracket to vehicle. Tighten all bolts, adjust lights to preferred position, and then fasten lights.

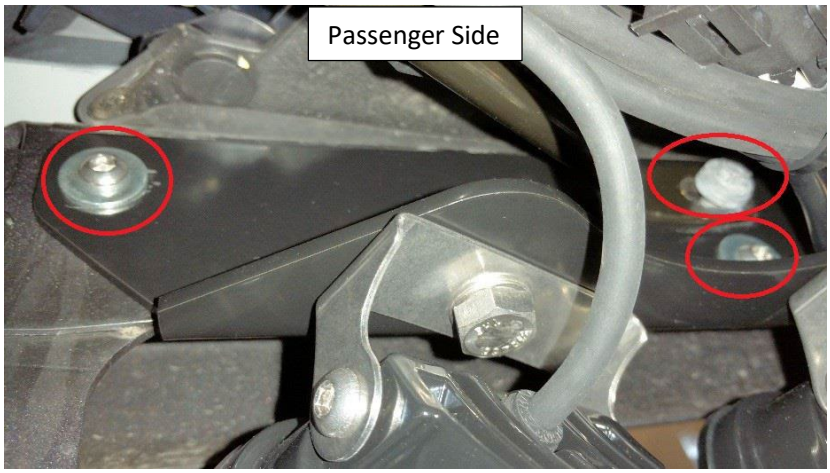

FIGURE 2

3. After both fog pocket kits and lights are installed, zip tie excess wiring to the support rod to keep wiring from being damaged. Attach harnesses along the frame rail beside the stock wiring harness or brake line.

4. Refer to the owner's manual for a 15amp auxiliary switch, and the appropriate wiring colors – **SEE NEXT PAGE**

5. Once you have determined the appropriate wire color, attach the white wire of the supplied up-fitter harness to your wire of choice by using the included splice connector. Then attach the black wire of the up-fitter harness to the battery/chassis ground.

Raptor *Squadron or S2 SAE* Fog Pocket Wiring Diagram

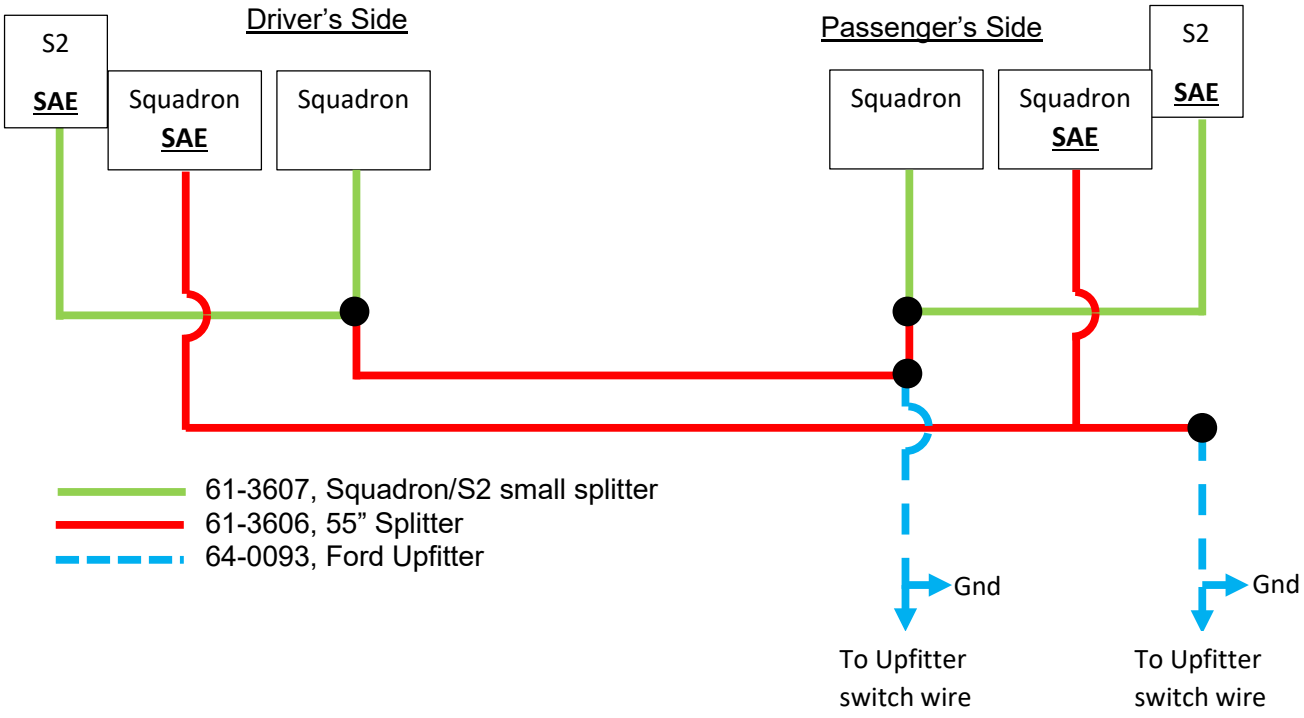

Connect each Baja Designs upfitter harness (+) positive white wire to the desired AUX switches and mount the (-) negative black ground wire to a chassis ground. Confirm that each AUX switch has the adequate amperage rating for the total combined amperage of the lights connected to it. The Ford OEM upfitter wires are located on the passenger side firewall taped to the wires that pass through.

NOTE: There are two bundles of taped wires near this location. The wires nearest the engine are to be used for this kit. The other wires are routed into the cab of the truck for switched auxiliary

Raptor Fog Pocket Wiring Diagram

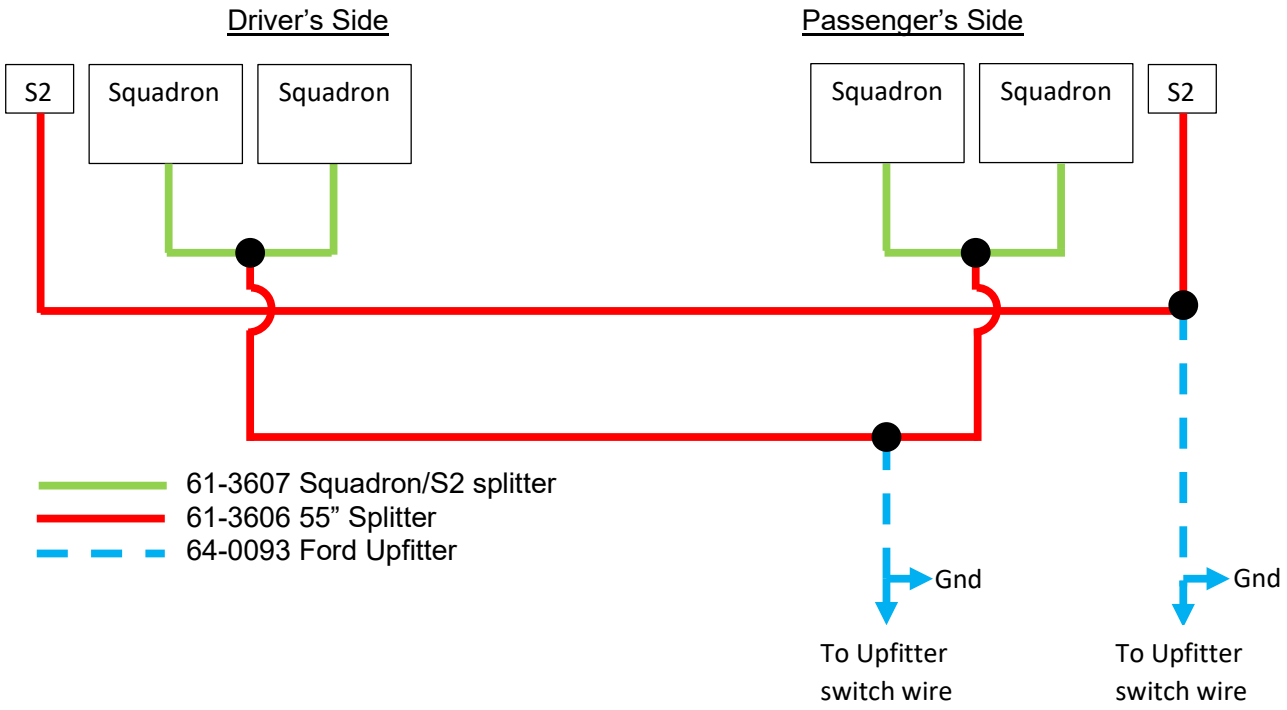

2017 Colors

Aux 1 – Green/Blue	15A
Aux 2 - Gray/Yellow	15A
Aux 3 - Violet/Orange	10A
Aux 4 - Brown/Blue	10A
Aux 5 - Gray/Orange	5A
Aux 6 - Yellow/Violet	5A

2018+ Colors

Aux 1 - Green/White	15A
Aux 2 - Brown/Blue	15A
Aux 3 - Gray/Yellow	10A
Aux 4 - Green/Yellow	10A
Aux 5 - Brown/White	5A
Aux 6 - Green/Orange	5A