Baja Designs 447755 Installation Instructions

Squadron Sport A-Pillar Kit for Bronco Raptor

Part number: 447755

trailfortress.com/baja-designs-squadron-sport-a-pillar-light-kit-447755

Scan for fitment, price and install help

Ford Bronco (21+) A-Pillar kit Instructions



2950 Norman Strasse Rd • San Marcos • CA • 92069

Phone 760-560-2252 X3 • Fax 760-560-0383

info@bajadesigns.com • www.bajadesigns.com

trailfortress.com/baja-designs-squadron-sport-a-pillar-light-kit-447755

LIMITED LIFETIME WARRANTY

Baja Designs proudly offers a LIFETIME WARRANTY against manufacturer's defect on all the products that we manufacture.
These are comprehensive warranties; other than the exclusions below – you're covered. If your LED or HID bulb burns out, you're covered. Additionally, cutting off our connector or changing your lenses does not automatically void your warranty.

Exclusions:
Installation errors, abuse, misuse or crash damage. You must be the original owner of the product and can supply proof of purchase.
Baja Designs manufactures its own products as well as resells products manufactured by others. Baja Designs makes no express or implied warranties on products not manufactured by Baja Designs including without limitation any warranties or merchantability and fitness for a purpose. We will, however, pass on all warranties made by the manufacturer, who has sole responsibility for performing such warranties.
Baja Designs will pay the freight if your product is less than 90 days old, otherwise defective products must be returned to Baja Designs, Inc., freight prepaid. At our option, we will repair or replace items in question and return them at no charge. If the identical product is no longer available, we will replace with a similar product of equal value. Baja Designs Inc. will not be responsible for any indirect or consequential damages in connection with defective merchandise.
Items purchased through a Baja Designs authorized dealer must be returned through the dealer. Only available on LED auxiliary lights and product must be in sellable condition at MSRP. Product that has been damaged in any way after the original purchase date will be excluded from this guarantee.

Indemnification:
Buyer hereby acknowledges off-roading, racing and driving at night are dangerous activities and that the products and/or supplies purchased from Baja Designs are used in an inherently dangerous activity that may endanger life and limb; and in no event shall the seller, or seller's heirs and assigns, be held liable for consequential damages, nor shall seller's liability on any claim for damages arising out of or connected with the sale, delivery, or use of purchased products and/or supplies exceed the purchase price of the products and/or supplies.

Buyer is responsible for ensuring that it uses the products (and its vehicle) in accordance with all applicable laws, regulations, guidelines, and standards of care. Buyer acknowledges that some products may only be used when off-roading, and Buyer will comply with all vehicle and road safety guidelines. Buyer is solely responsible for (and will indemnify and hold Bestop harmless for) any claims, losses, damages, fines, fees, costs, or other amounts arising out of Buyer's non-compliance with these provisions.

trailfortress.com/baja-designs-squadron-sport-a-pillar-light-kit-447755

Ford Bronco 21+ A-Pillar kit Instructions

Tools Required

- 10mm and ½” Wrench (battery tools)
- Trim tool or flathead screwdriver
- T30 and T20 Torx bit
- 10mm Socket
- 3mm Allen Wrench
- ¾ Drill (non-upfitter models)
- Pliers (Upfitter)
- 7/16” wrench and 5mm Allen Wrench (XL)
- 4mm Allen Wrench (Squadron)
- Electrical tape

1. To begin, place the vehicle in park, turn off and disconnect the negative battery terminal (1/2” wrench).

2. **Squadron:** Locate the parts bag. With the 4mm Allen wrench, mount the u-bracket to one light with the serrated washers in-between the u-bracket and the squadron housing. Repeat for the second light. The larger 3/8” hardware will not be used.

3. **XL:** Locate the parts bag. With the 7/16” wrench, mount the u-bracket to one light with the four short hex head bolts. Use washers in-between the bracket and the light, as well as on the outside of the u-bracket. Repeat for the second light. The 3/8” hardware and longer ¼” hardware will not be used.

Squadron

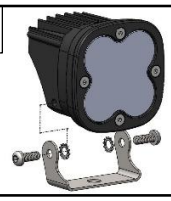

XL

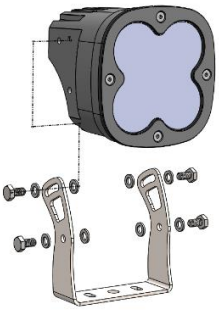

4. With the T30 and T20 Torx bit, remove the two circled Accessory Ready bolts on the passenger side. Loosen by hand and remove the antenna. With the trim tool, pry up on the windshield wiper cowling plastic until there is a large enough gap to route the light power cord behind. The harness will leave the wiper cowling in the very bottom corner of the windshield (white arrow).

4



5. Carefully rest the passenger side light on the mirror mount face down. Use a soft cloth to prevent scratches. Slide the power cord into the opening of the windshield wiper cowling and around the antenna mounting boss and out the arrowed location in step 4.



5



6. Move the light inboard to the top surface of the windshield wiper cowling. Make sure the light connector is in the engine compartment before the A-pillar plate is bolted down. Repeat steps 4-6 for the driver side.

trailfortress.com/baja-designs-squadron-sport-a-pillar-light-kit-447755

7. **<u>Squadron Only:</u>** Mount the passenger side A-pillar plate with the stud insert facing up (shown) using the provided counter sink bolts and the 3mm Allen wrench. With the 10mm wrench, mount the Squadron assembly onto the 6mm stud using the provided washer and nut. Replace the antenna. (Light hidden to show detail)

   - Repeat for Driver side.

7

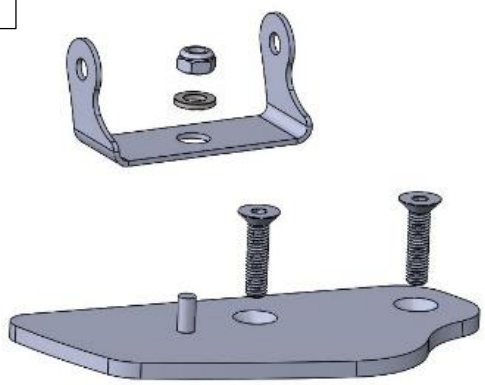

8. **<u>XL Only:</u>** Mount the passenger side A-pillar plate with the stud insert facing up (shown) using the provided counter sink bolt and the 3mm Allen wrench. With the 10mm wrench and 5mm Allen wrench, mount the XL assembly onto the 6mm stud using the provided washer, nut, and socket head bolt. Replace the antenna. (Light hidden to show detail)

   - Repeat for Driver side

8

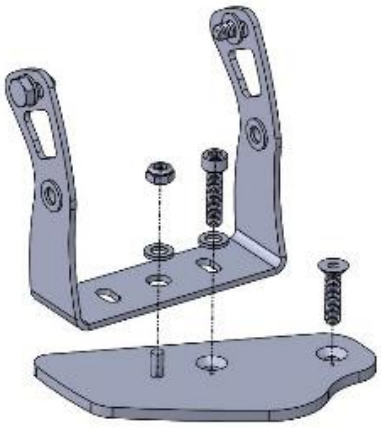

9. <u>If you purchased the Upfitter switch version:</u>
**XL kits will come with extra toggle switch harness that will not be used.*

- Locate the bundle of upfitter wires in the back driver side corner taped to the large wiring harness. Pull the tape off to access the wires.
- The Upfitter wire ratings are shown in the table. Choose a switch. (**XL80s will only work with AUX1-AUX2)**
- Using the pliers, clasp the splice connector of the upfitter splice harness over the desired wire/circuit. Wrap the tape back over the remaining wires. Make sure all wires are isolated and add electrical tape as needed.
- Mount the black ring terminal of the splice harnesses to the common ground on the driver side firewall using a 10mm socket wrench.
- Attach the upfitter harness to the included splitter harness and route the long lead of the splitter to the passenger side light across the firewall and connect.
- Route the shorter splitter lead to the driver side light and connect.
- Tie harness against firewall and roll up and tie any excess inside the driver side inner fender.
- Reattach battery ground (-).

Power Distribution Box	Wire Color	Wire Size	Fuse
AUX 1	Yellow	1.5 mm²	30A
AUX 2	Green/Brown	1.5 mm²	15A
AUX 3	Violet/Green	0.75 mm²	10A
AUX 4	Brown	0.75 mm²	10A
AUX 5	Blue/Orange	0.75 mm²	10A
AUX 6	Yellow/Orange	0.75 mm²	10A

9

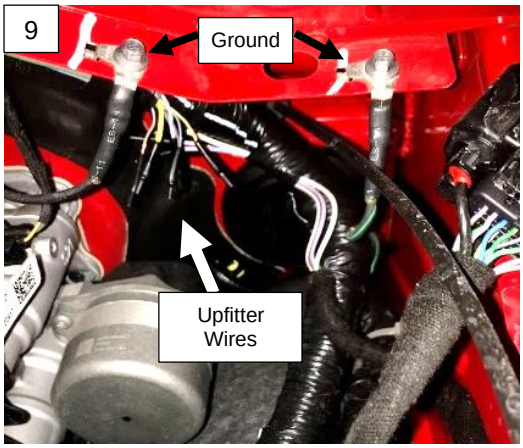

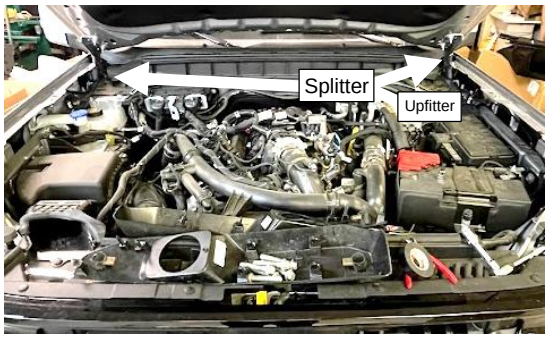

10. <u>If you purchased the stand-alone toggle switch version:</u>

- Locate the firewall passthrough grommet on the right side of the brake booster. In the cab, this will be located next to the footrest. Push grommet into engine compartment from the cab.
- There are two easy options for switch locations on the dash in the locations arrowed under the headlight controls.
- Gently pull dash panel away until unclipped. Locate the two circled indentations on the back of the dash below the headlight controls. These are the two suggested switch mounting locations.
- Snap a photo of the switch wiring for reference later. Remove the switch terminals from the switches. Remove the tape around the wires on either side of the passthrough grommet.
- Choose the desired dash locations for the switches. Drill ¾" hole.
- Thread the wires through the hole in the passthrough grommet, reattach switch terminals, and mount switch. Tape around the wires of the grommet. Install dash panel.
- Route each light lead of the harness to a light and connect.
- Tie harness against firewall and roll up and tie any excess inside the driver side inner fender.
- Mount the (+) and (-) ring terminals of the harness to the corresponding battery terminals starting with the (+) red lead.
- Reattach battery ground (-)





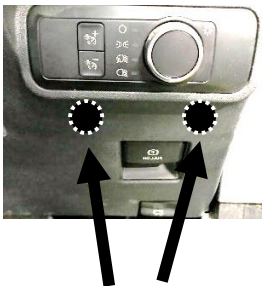

Suggested Switch Locations



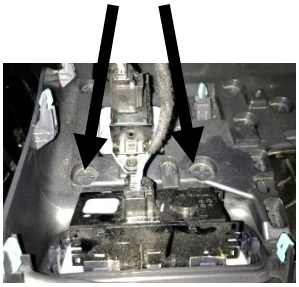

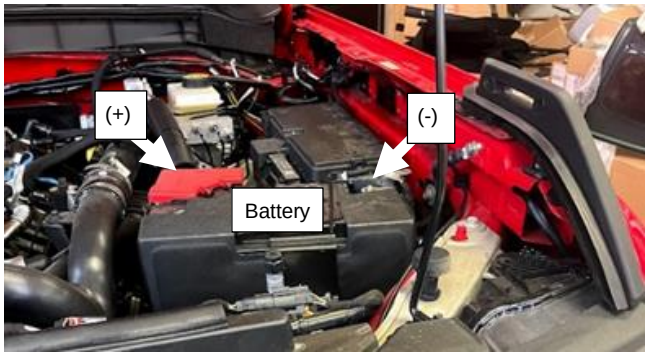

Tie all wires away from sharp, hot, and/or rotating components.

Re-torque all the fasteners after 100 miles.

Your install is now complete! Thank you for choosing Baja Designs.

trailfortress.com/baja-designs-squadron-sport-a-pillar-light-kit-447755