TRAIL FORTRESS

BUILT FOR THE TRAIL. CHECKED FOR YOUR TRUCK.

Baja Designs 18-7801 Installation Instructions

18-7801

Part number: 18-7801

trailfortress.com/baja-designs-dot-lp6-led-headlight-replacement-pair-18-7801

Scan for fitment, price and install help

baja designs
THE SCIENTISTS OF LIGHTING

2950 Norman Strasse Rd. San Marcos, CA 92069

DOT LP6

INFO@BAJADESIGNS.COM
WWW.BAJADESIGNS.COM
PHONE 760-560-2252
FAX 760-560-0383

Digital Instructions

Connector Wiring Instructions

LP9/LP6 Pro & Racer Edition

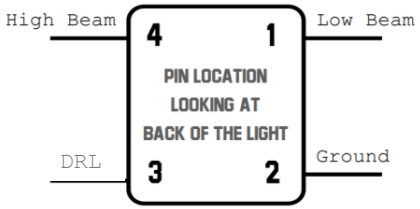

- DOT LP6 Operating Voltage: 12-24 Volts.
- Low Beam, High Beam, and Daytime Running Lights (DRL) function off positive current.
- If you are creating your own wiring harness, the mating connector for the back of the light is a Deustsch Connector (DT06-4S).

Use a three position toggle switch (on/off/on) that is Double Pole, Double Throw (DPDT). In one of the On positions, it will supply power to the low beam. In the opposite On position, it will supply power to the high beam. DRL is powered by tapping into OEM harness. Using incorrect wire size may result in fire or damage to the light. Refer to table below for wire sizing.

Custom Harness Wire Sizes (AWG)			
	Dual light		Single light
Pin	Battery to split Junction	Light to split Junction	Battery to Light
1	12	14	14
2	12	14	14
3	14	16	16
4	12	14	14

DOT LP6 Wiring Harness Schematic

Relay PN: 4RD 933 332-18

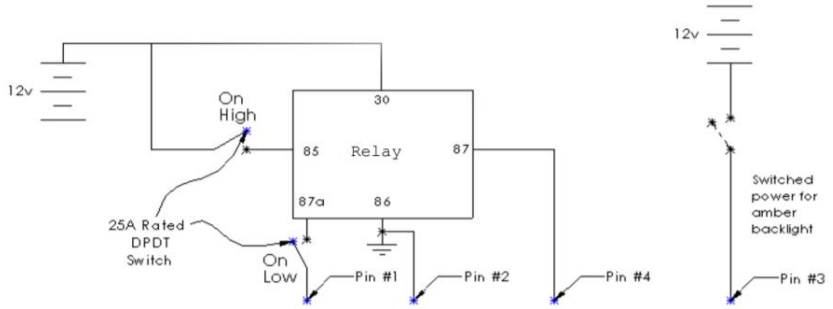

Important Safety & Compliance Notice

WARNING: DO NOT DISASSEMBLE THIS LIGHT

Any attempt to open the light or swap its lens or optics **immediately voids DOT and FMVSS compliance** and renders the product **illegal for street use**. This product meets federal requirements **only** when used with original, factory-certified components.

⚠ **Violation of these provisions can result in legal penalties from non-compliance with Federal, State or Local regulations**, as well as automatic voiding of the warranty. Product meets legal requirements **only with original, certified** components.

Headlight Adjustment Instructions

Locate circle center mark on the lens. Measure the distance from the ground to the center mark and measure the distance between the center mark on both lights.

Circle marking center of headlight

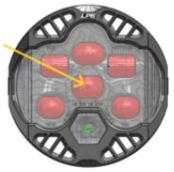

Place a horizontal piece of tape at the height of the circle on the wall (A). Place vertical pieces of tape, marking the circles of each headlight (B, C) and the centerline of the car (D).

High Beam Adjustment

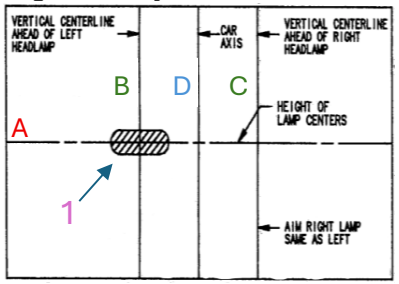

Low Beam Adjustment

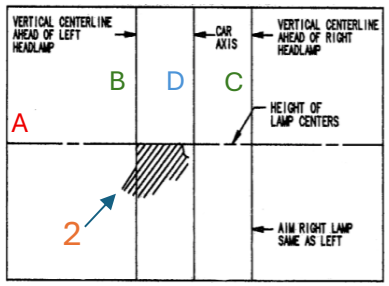

Drive the car straight back to exactly **25 feet** away from the wall. Turn on the high beams and ensure the center of the high-intensity zone falls within Region 1 on the wall. Switch to low beams and confirm the beam center is in Region 2. Use the adjustment screws to align the headlights so each beam falls within its designated region.

trailfortress.com/baja-designs-dot-lp6-led-headlight-replacement-pair-18-7801