ANZO USA 809057 Installation Instructions

809057

Part number: 809057

trailfortress.com/anzo-usa-led-light-bulb-resistor-kit-809057

Scan for fitment, price and install help

Load Resistor

- Solve LED related signal and side marker problems such as hyper ashing or burnt out bulb indications

Caution:

- This load resistor gets extremely hot and needs to be installed correctly.
- The at surface of the resistor needs to make a good secure contact on a clean at metal surface on your vehicle. This will act as a heat sink which should keep the load resistor cooler.
- Keep this load resistor away from oil, making contact with skin, plastic, wire and combustible gasses and material.
- We are not responsible for damage caused to persons or property with installation of the load resistor.

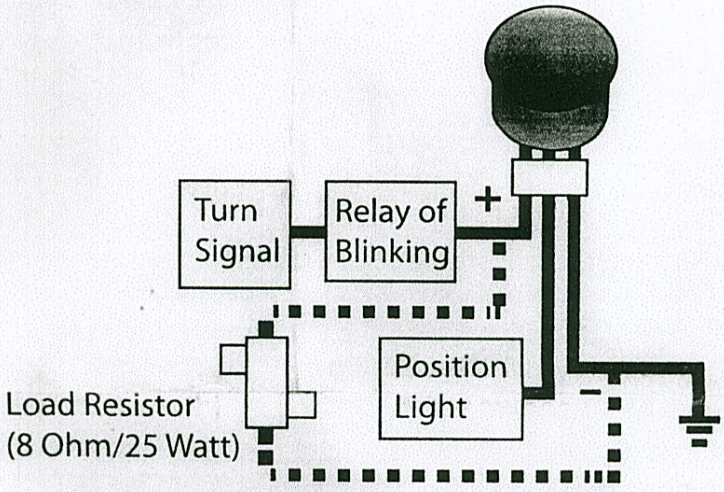

trailfortress.com/anzo-usa-led-light-bulb-resistor-kit-809057